CUDEVICES

MODEL: CPS-3016-110L100 | **DESCRIPTION:** PIEZO BUZZER TRANSDUCER

FEATURES

- 12 V rated
- 110 dB
- wire leads



RoHS

SPECIFICATIONS

parameter	conditions/description	min	typ	max	units
rated voltage	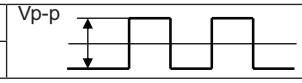		12		Vp-p
operating voltage		1		40	Vp-p
current consumption	at rated voltage, 3,200 Hz, ½ duty square wave			5	mA
rated frequency			3,200		Hz
sound pressure level	at 10 cm, rated voltage, 3,200 Hz, ½ duty square wave	110	115		dB
electrostatic capacitance	at 100 Hz	18,200	26,000	33,800	pF
tone	single				
dimensions	Ø30.6 x 16.0				mm
weight			5.5		g
material	ABS777D				
terminal	wire leads				
operating temperature		-30		70	°C
storage temperature		-40		85	°C
washable	no				
RoHS	yes				

Notes: 1. All specifications measured at 25±3°C, humidity at 60~70%, under 86~106 kPa pressure, unless otherwise noted.

SOLDERABILITY

parameter	conditions/description	min	typ	max	units
hand soldering		360	380	400	°C

MECHANICAL DRAWING

units: mm
tolerance: ±0.5 mm

wire: UL1007 AWG 28

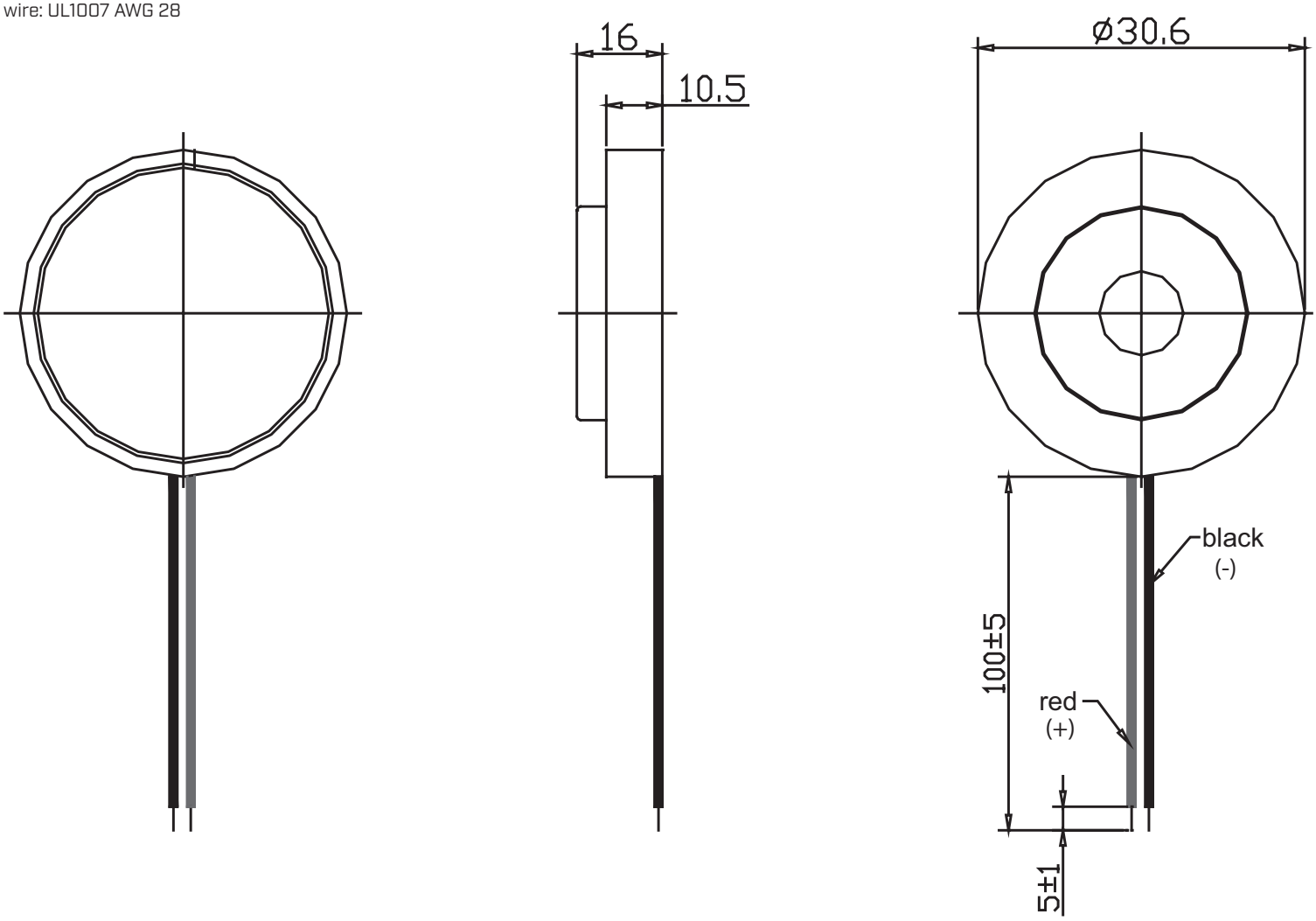

FREQUENCY RESPONSE CURVE

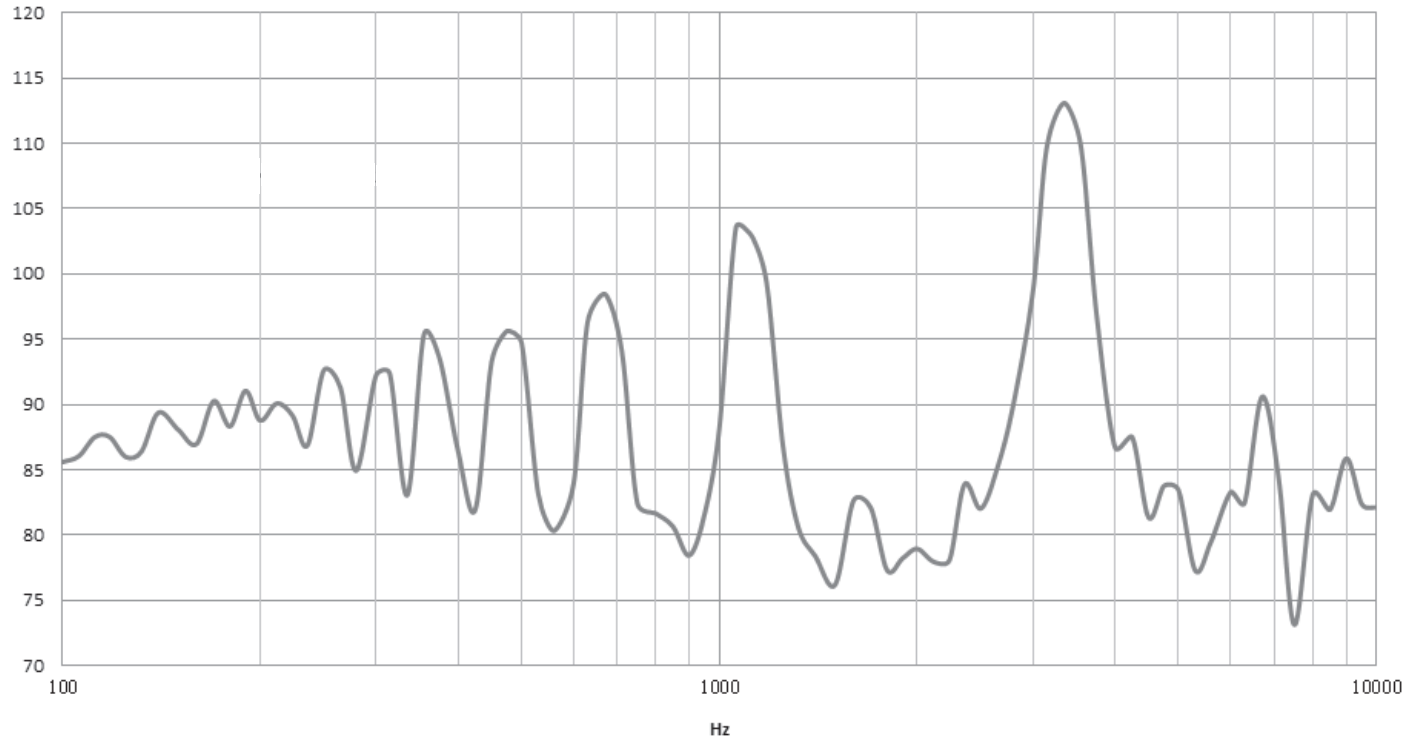

APPLICATION CIRCUIT

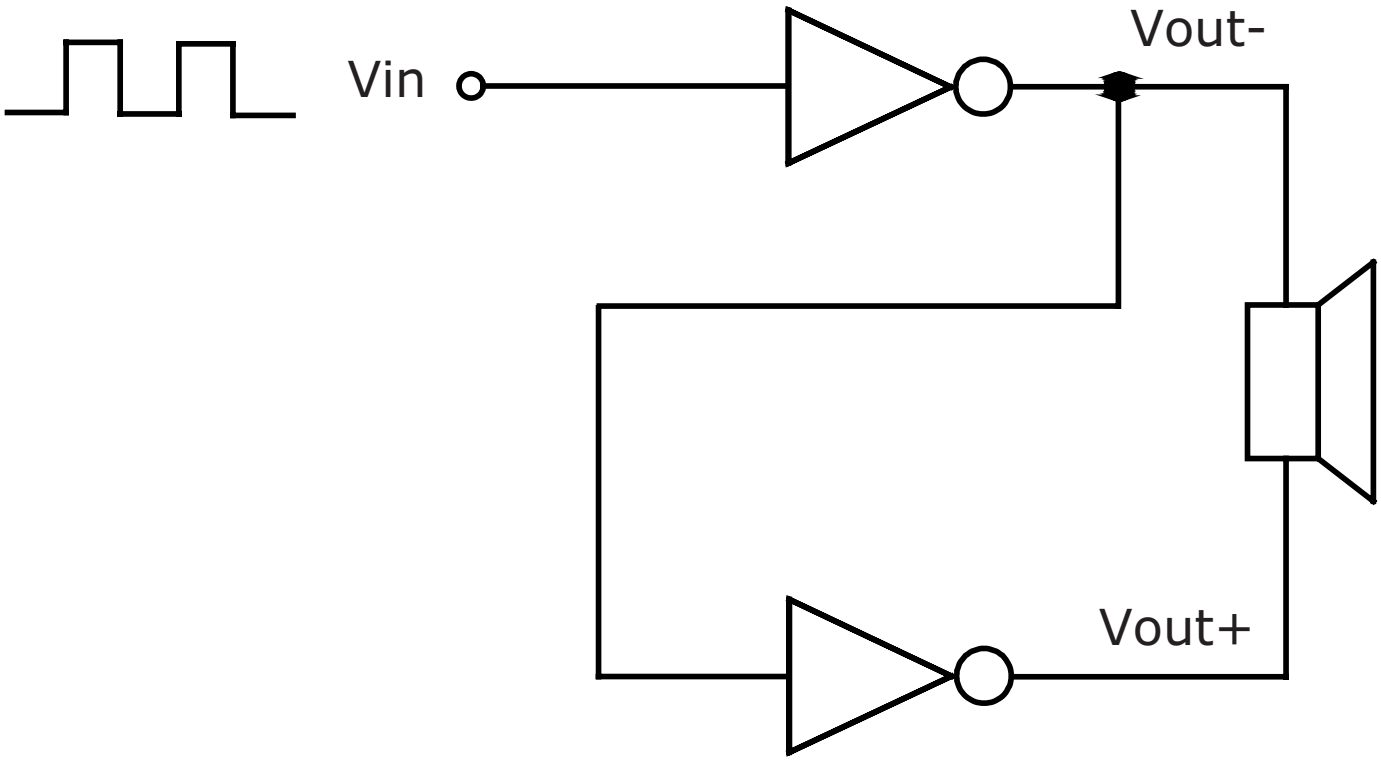

PACKAGING

units: mm

Carton Size: 500 x 260 x 490 mm
Carton QTY: 1,000 pcs per carton

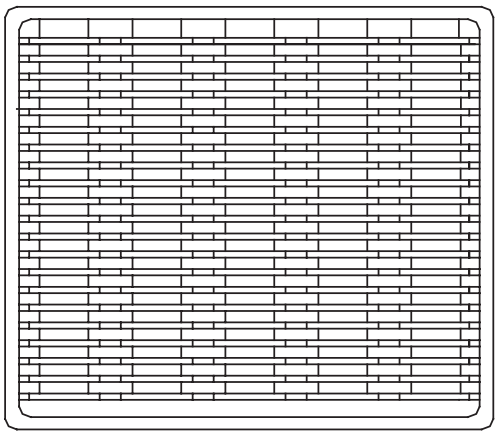

Per tray 50 pcs.

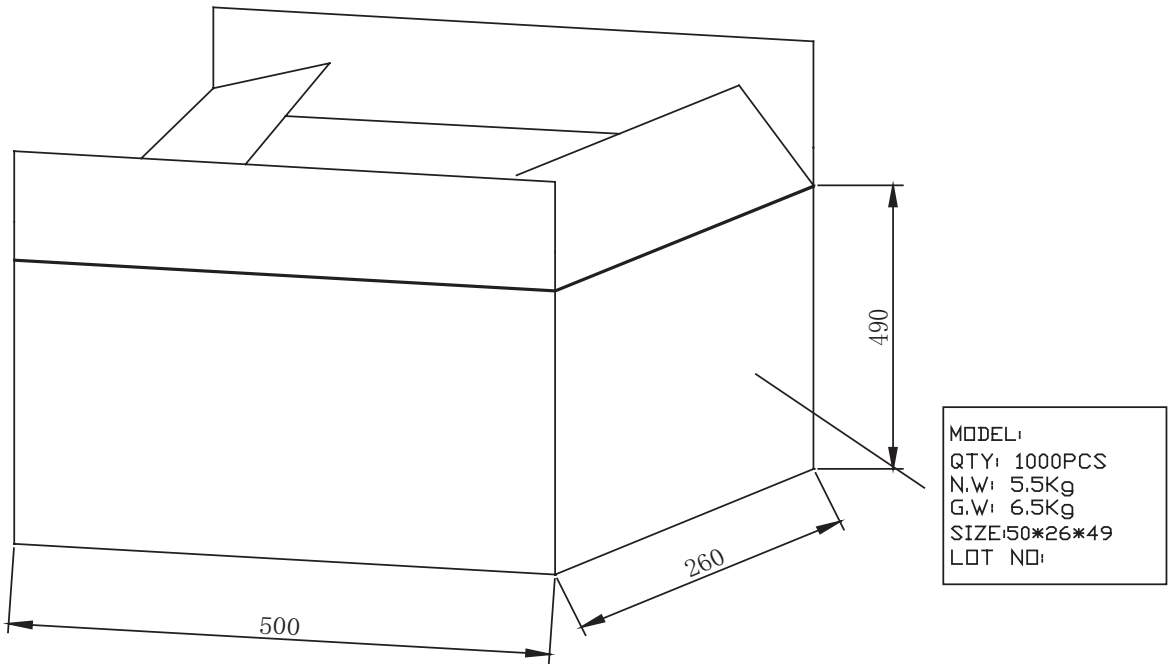

Per box 1000 pcs.

REVISION HISTORY

rev.	description	date
1.0	initial release	01/08/2020
1.01	logo, datasheet style update	08/05/2022

The revision history provided is for informational purposes only and is believed to be accurate.

CUI Devices offers a one (1) year limited warranty. Complete warranty information is listed on our website.

CUI Devices reserves the right to make changes to the product at any time without notice. Information provided by CUI Devices is believed to be accurate and reliable. However, no responsibility is assumed by CUI Devices for its use, nor for any infringements of patents or other rights of third parties which may result from its use.

CUI Devices products are not authorized or warranted for use as critical components in equipment that requires an extremely high level of reliability. A critical component is any component of a life support device or system whose failure to perform can be reasonably expected to cause the failure of the life support device or system, or to affect its safety or effectiveness.

cuidevices.com