CUDEVICES

MODEL: CPS-4013-110T | **DESCRIPTION:** PIEZO BUZZER TRANSDUCER

FEATURES

- 9 V rated
- externally driven
- through hole



RoHS

SPECIFICATIONS

parameter	conditions/description	min	typ	max	units
rated voltage			9		Vdc
operating voltage		6		12	Vdc
current consumption	at rated voltage			50	mA
rated frequency		2,900	3,200	3,500	Hz
sound pressure level	at 10 cm, rated voltage	110	115		dB
tone	single				
dimensions	Ø40.0 x 12.6				mm
weight			9.6		g
material	ABS777D				
terminal	pins (red copper with tin plating)				
operating temperature		-20		60	°C
storage temperature		-30		70	°C
washable	no				
RoHS	yes				

Notes: 1. All specifications measured at 5~35°C, humidity at 45~85%, under 86~106 kPa pressure, unless otherwise noted.

SOLDERABILITY

parameter	conditions/description	min	typ	max	units
hand soldering		360	380	400	°C
wave soldering	see graph below				

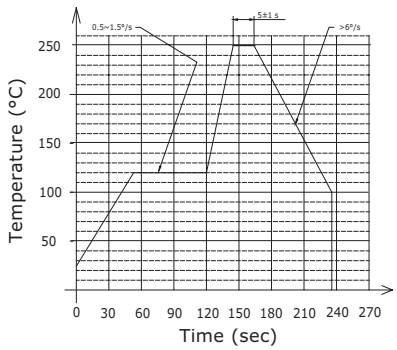

MECHANICAL DRAWING

units: mm
tolerance: ±0.5 mm

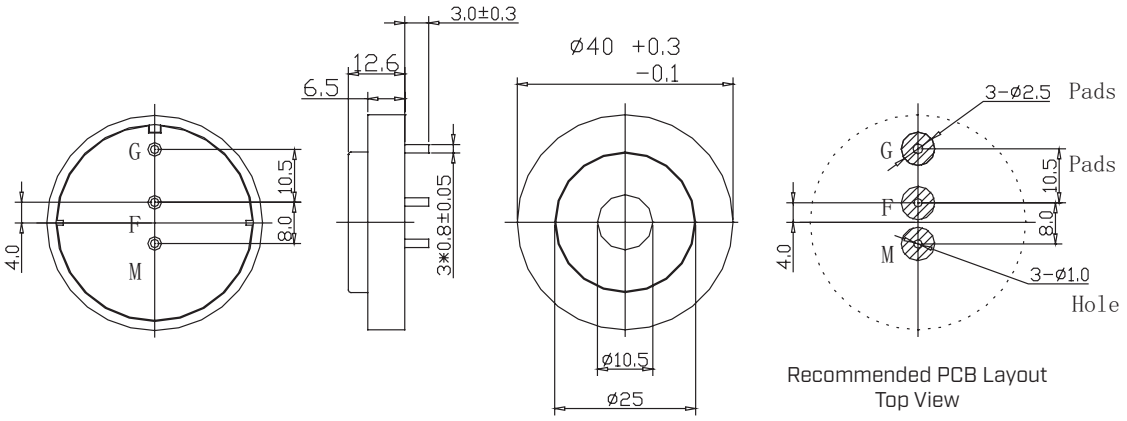

PERFORMANCE CURVES

SPL: Voltage vs. Sound Pressure Level
I: Voltage vs. Current Consumption

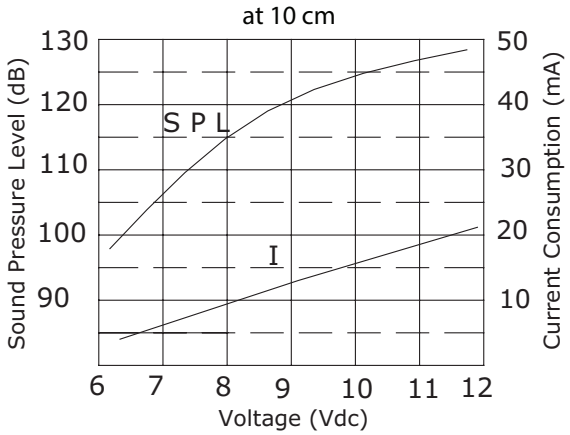

DRIVING CIRCUIT

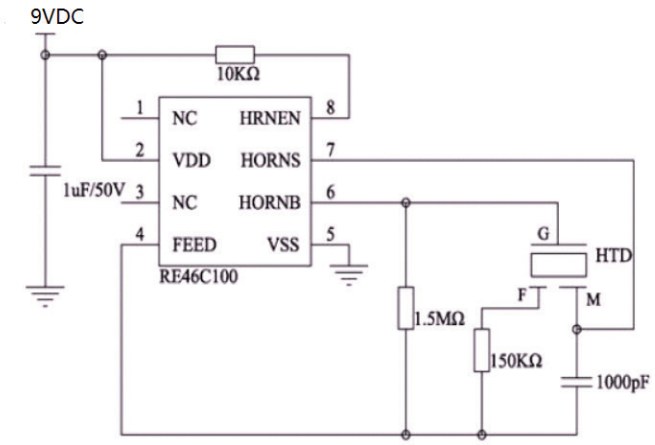

Notes: 1. The current consumption and the sound pressure level are measured by using the recommended driving circuit shown above.

PACKAGING

units: mm

Carton Size: 585 x 315 x 330 mm
Carton QTY: 500 pcs per carton

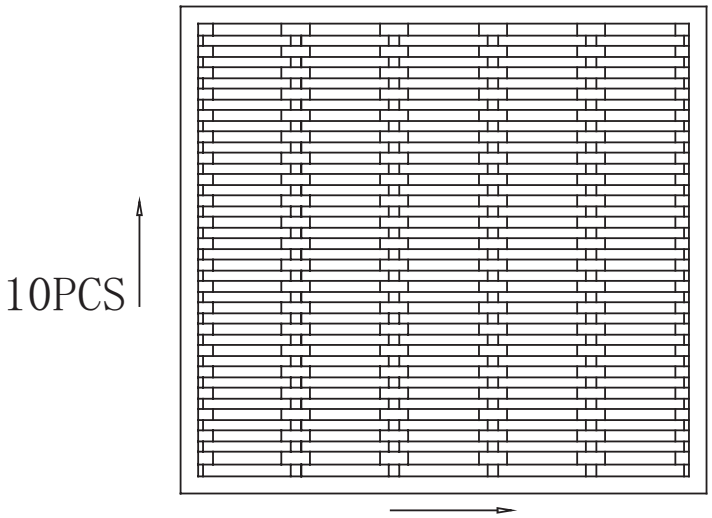

50 PCS/PACKING BOX

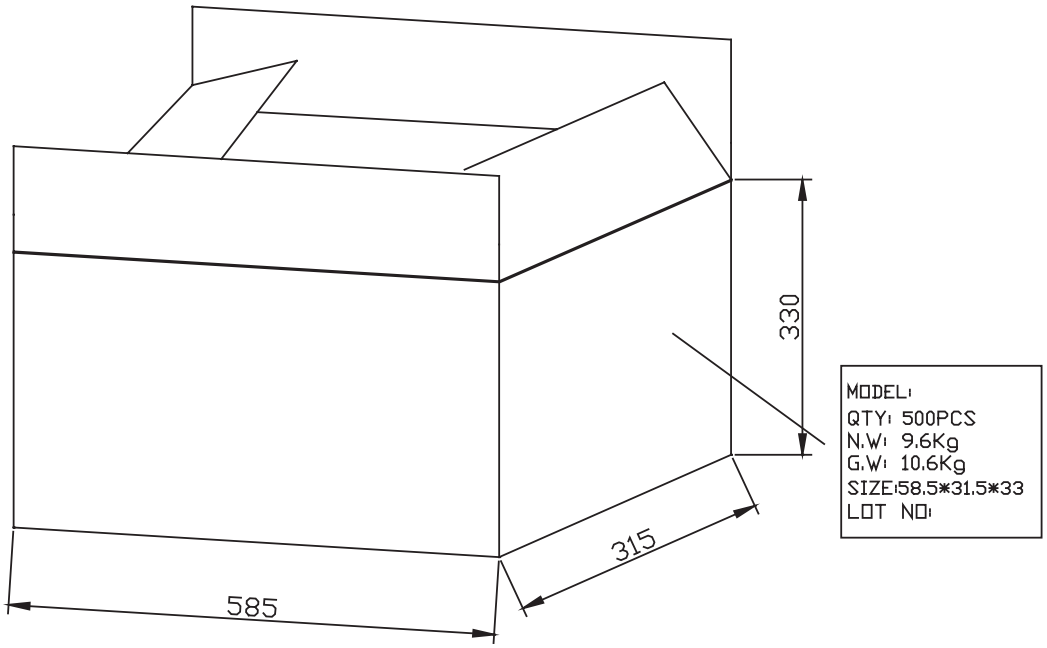

500 PCS/CTN

REVISION HISTORY

rev.	description	date
1.0	initial release	01/08/2020
1.01	updated datasheet	06/15/2020
1.02	updated drawing	01/14/2022
1.03	logo, datasheet style update	08/05/2022
1.04	updated recommended driving circuit	07/12/2024

The revision history provided is for informational purposes only and is believed to be accurate.

CUI Devices offers a one (1) year limited warranty. Complete warranty information is listed on our website.

CUI Devices reserves the right to make changes to the product at any time without notice. Information provided by CUI Devices is believed to be accurate and reliable. However, no responsibility is assumed by CUI Devices for its use, nor for any infringements of patents or other rights of third parties which may result from its use.

CUI Devices products are not authorized or warranted for use as critical components in equipment that requires an extremely high level of reliability. A critical component is any component of a life support device or system whose failure to perform can be reasonably expected to cause the failure of the life support device or system, or to affect its safety or effectiveness.

cuidevices.com