CUDEVICES

MODEL: CPS-4318-105L085 | **DESCRIPTION:** PIEZO BUZZER INDICATOR

FEATURES

- 12 Vdc rated
- 100 dB
- continuous/slow pulse/fast pulse functions
- wire leads



RoHS

SPECIFICATIONS

parameter	conditions/description	min	typ	max	units
rated voltage			12		Vdc
operating voltage		6		28	Vdc
current consumption	at rated voltage			25	mA
rated frequency	at rated voltage	2,400	2,900	3,400	Hz
sound pressure level	at 30 cm, rated voltage	100			dB
tone	continuous (red + black wires) slow pulse (red + green wires: 1.2 ±30% Hz) fast pulse (red + white wires: 2.0 ±30% Hz)				
dimensions	Ø43.0 x 18.0				mm
weight			20		g
material	PBT				
terminal	wire leads				
operating temperature		-30		70	°C
storage temperature		-40		85	°C
washable	no				
RoHS	yes				

Notes: 1. All specifications measured at 25±3°C, humidity at 60~70%, under 86~106 kPa pressure, unless otherwise noted.

SOLDERABILITY

parameter	conditions/description	min	typ	max	units
hand soldering		360	380	400	°C

MECHANICAL DRAWING

units: mm
tolerance: ±0.5 mm

wire: UL1007 26 AWG

TONE	CONNECTIONS
Continuous	Red (+) + Black (-)
Slow Pulse	Red (+) + Green (-)
Fast Pulse	Red (+) + White (-)

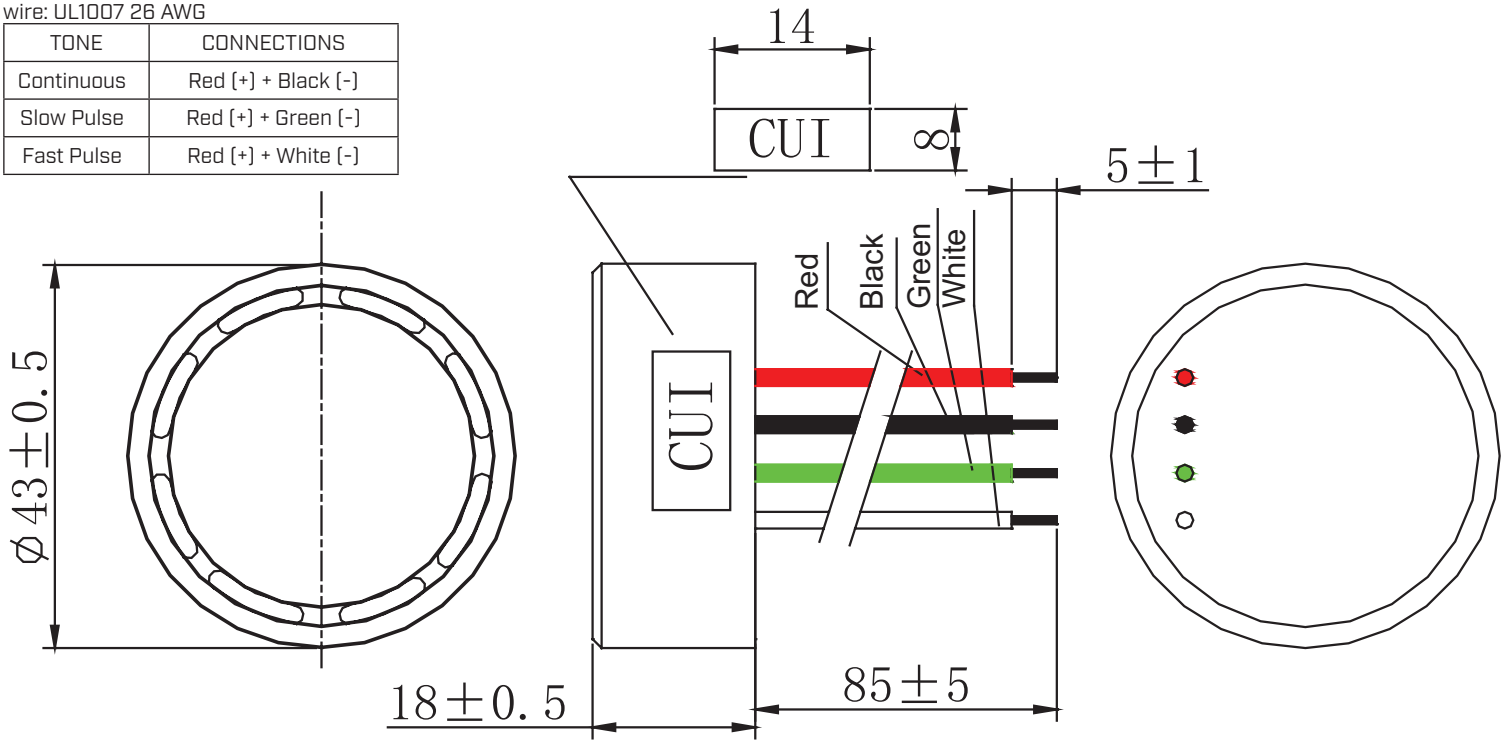

PERFORMANCE CURVES

SPL: Voltage vs. Sound Pressure Level
I: Voltage vs. Current Consumption

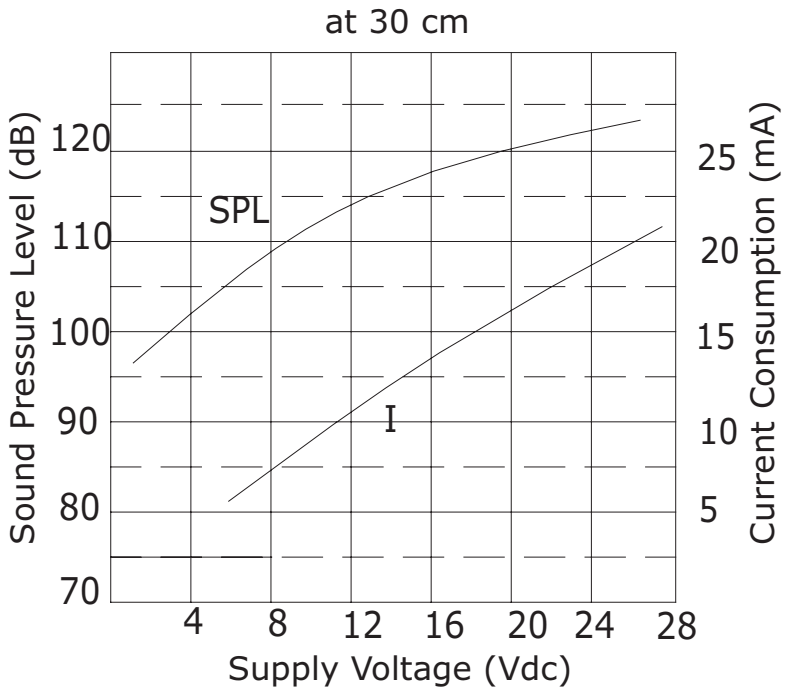

PACKAGING

units: mm

Carton Size: 585 x 315 x 330 mm
Carton QTY: 400 pcs per carton

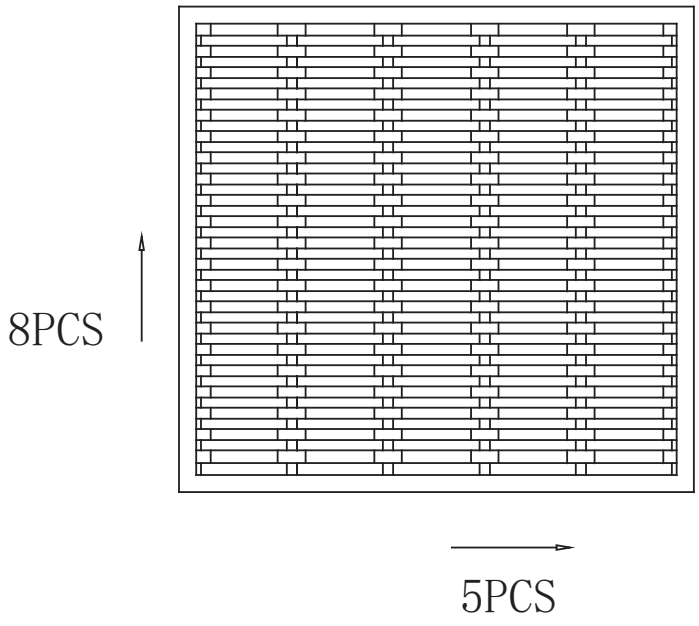

8×5PCS=40PCS/box

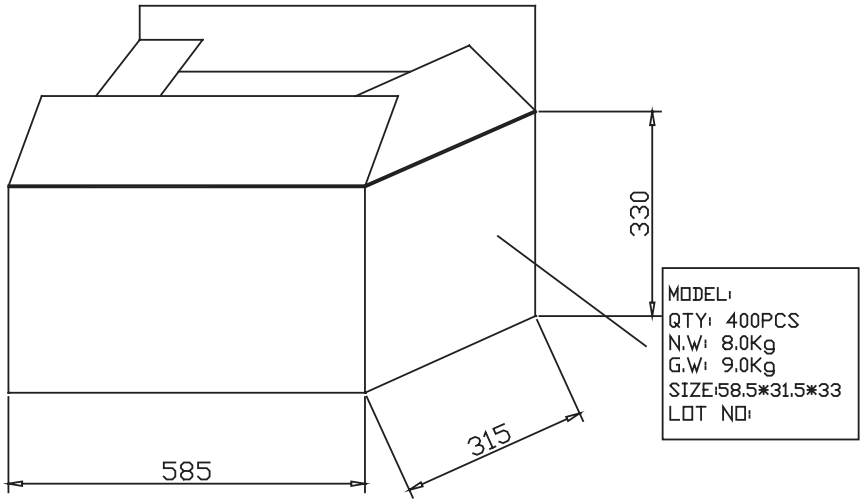

400PCS/CTN

REVISION HISTORY

rev.	description	date
1.0	initial release	01/08/2020
1.01	logo, datasheet style update	08/05/2022

The revision history provided is for informational purposes only and is believed to be accurate.

CUI Devices offers a one (1) year limited warranty. Complete warranty information is listed on our website.

CUI Devices reserves the right to make changes to the product at any time without notice. Information provided by CUI Devices is believed to be accurate and reliable. However, no responsibility is assumed by CUI Devices for its use, nor for any infringements of patents or other rights of third parties which may result from its use.

CUI Devices products are not authorized or warranted for use as critical components in equipment that requires an extremely high level of reliability. A critical component is any component of a life support device or system whose failure to perform can be reasonably expected to cause the failure of the life support device or system, or to affect its safety or effectiveness.

cuidevices.com