MODEL: CPS-5952-100PM | DESCRIPTION: SIREN

FEATURES

- warble tone
- internally driven
- mounting bracket



RoHS

SPECIFICATIONS

parameter	conditions/description	min	typ	max	units
rated voltage	with reverse polarity protection		24		Vdc
operating voltage	with reverse polarity protection	12		25	Vdc
current consumption	at rated voltage		50	100	mA
rated frequency		1,800		3,500	Hz
sound pressure level	at 1 m, rated voltage	95	100	105	dB
tone	warble				
dimensions	45 x 40 x 59				mm
weight			53.5		g
material	ABS (UL94HB)				
terminal	wire leads				
operating temperature		-20		70	°C
storage temperature		-30		80	°C
washable	no				
RoHS	yes				

Notes: 1. All specifications measured at 25±3°C, humidity at 60~70%, under 86~106 kPa pressure, unless otherwise noted.

MECHANICAL DRAWING

units: mm
tolerance: ±3 mm

wire: UL 1007 24 AWG

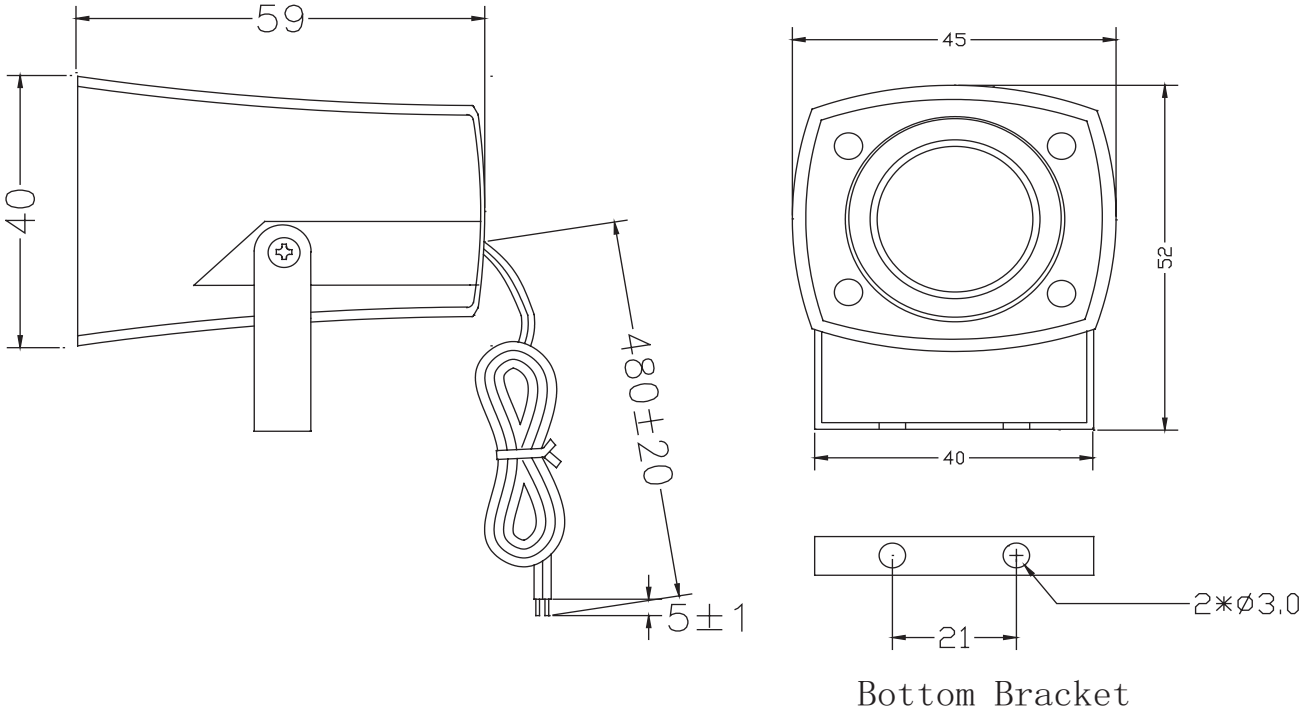

PACKAGING

units: mm

Carton Size: 290 x 240 x 480 mm
Carton QTY: 200 pcs per carton

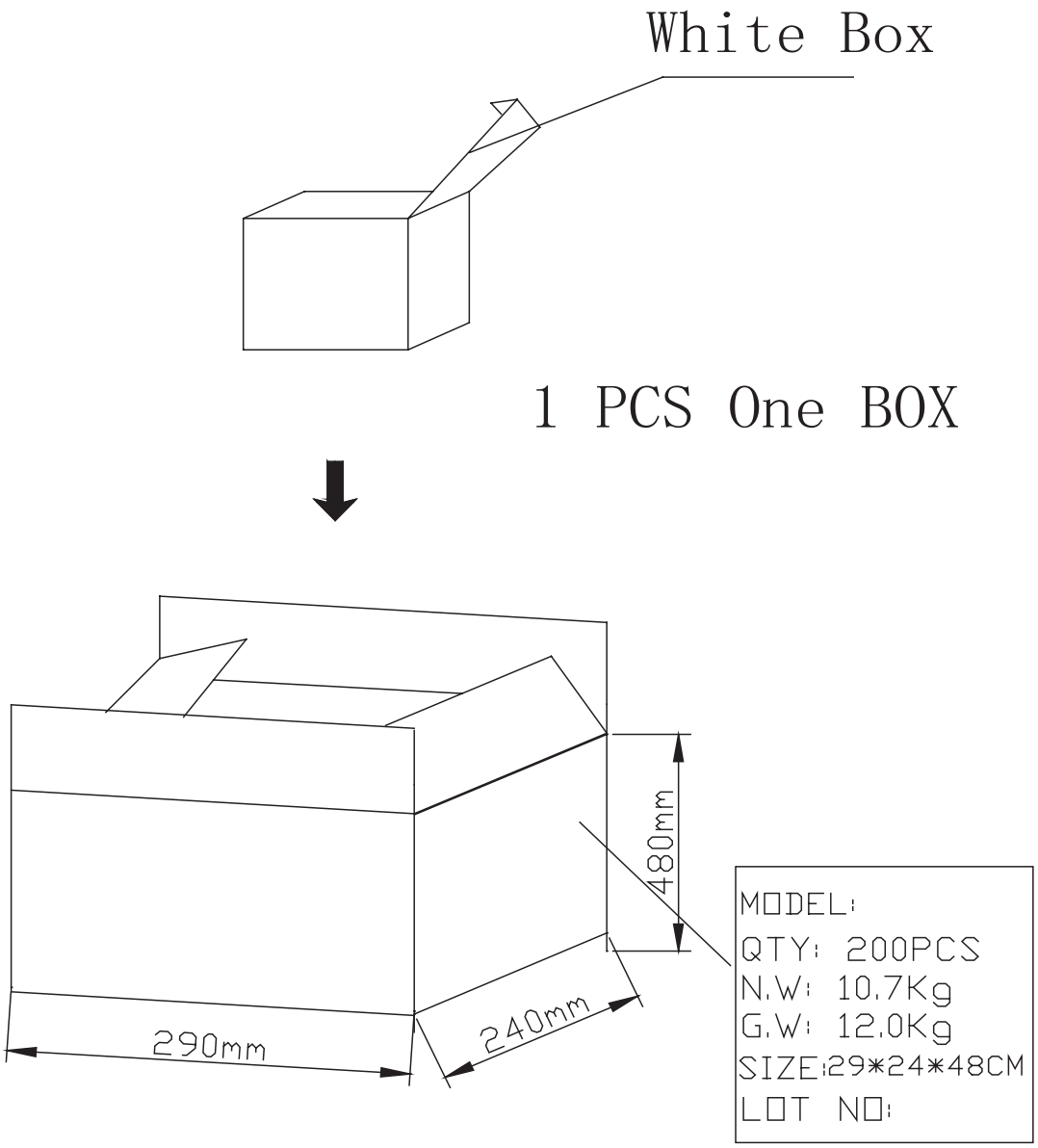

REVISION HISTORY

rev.	description	date
1.0	initial release	01/20/2020
1.01	logo, datasheet style update	08/05/2022

The revision history provided is for informational purposes only and is believed to be accurate.

CUI Devices offers a one (1) year limited warranty. Complete warranty information is listed on our website.

CUI Devices reserves the right to make changes to the product at any time without notice. Information provided by CUI Devices is believed to be accurate and reliable. However, no responsibility is assumed by CUI Devices for its use, nor for any infringements of patents or other rights of third parties which may result from its use.

CUI Devices products are not authorized or warranted for use as critical components in equipment that requires an extremely high level of reliability. A critical component is any component of a life support device or system whose failure to perform can be reasonably expected to cause the failure of the life support device or system, or to affect its safety or effectiveness.

cuidevices.com