CUDEVICES

MODEL: CPT-14146-80T | **DESCRIPTION:** PIEZO BUZZER TRANSDUCER

FEATURES

- 30 Vp-p max operating voltage
- 80 dB



RoHS

SPECIFICATIONS

parameter	conditions/description	min	typ	max	units
rated voltage	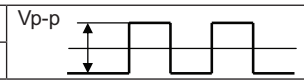		10		Vp-p
operating voltage				30	Vp-p
current consumption	at 10 Vp-p, 4,000 Hz, ½ duty square wave			7	mA
rated frequency			4,000		Hz
sound pressure level	at 10 cm, 10 Vp-p, 4,000 Hz, square wave	80			dB
electrostatic capacitance	at 120 Hz / 1 V	5,950	8,500	11,050	pF
dimensions	Ø14 x 6.7				mm
weight				1.0	g
material	PBT+10% GF				
terminal	pin (gold plating)				
operating temperature		-30		85	°C
storage temperature		-40		90	°C
washable	no				
RoHS	yes				

Notes: 1. All specifications measured at 5~35°C, humidity at 45~85%, under 86~106 kPa pressure, unless otherwise noted.

SOLDERABILITY

parameter	conditions/description	min	typ	max	units
hand soldering	for 2 seconds	330		380	°C

MECHANICAL DRAWING

units: mm
tolerance: ±0.5 mm

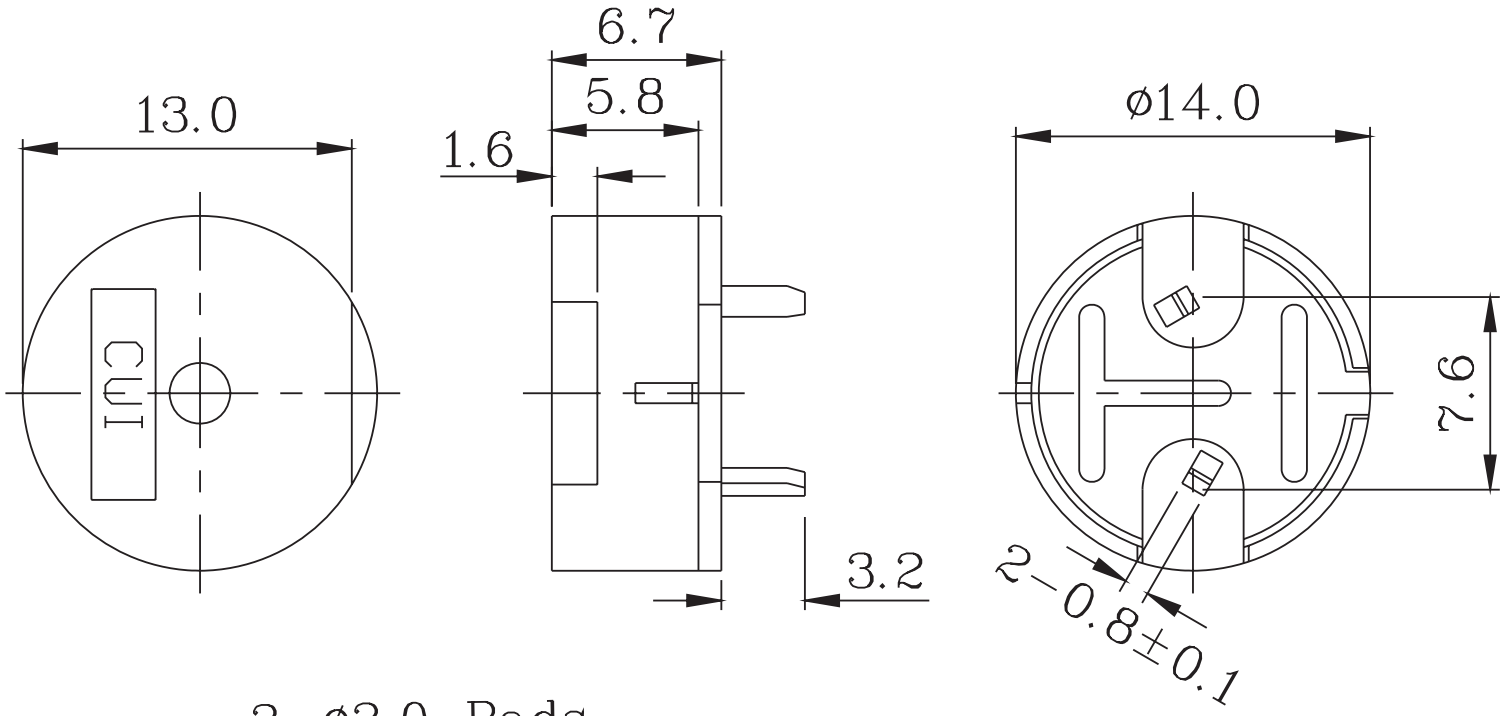

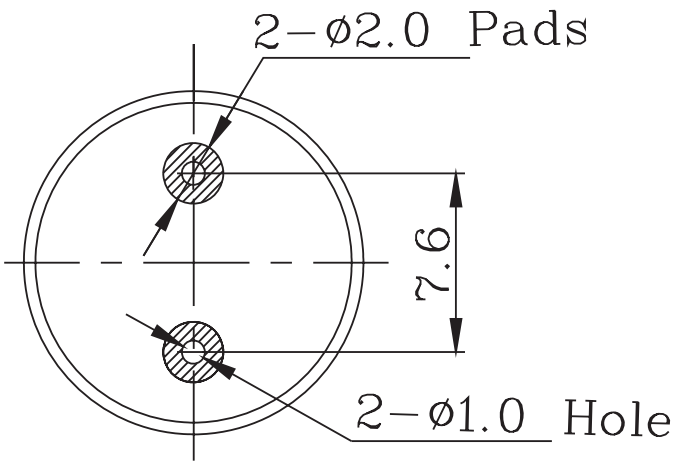

Recommended PCB Layout
Top View

FREQUENCY RESPONSE CURVE

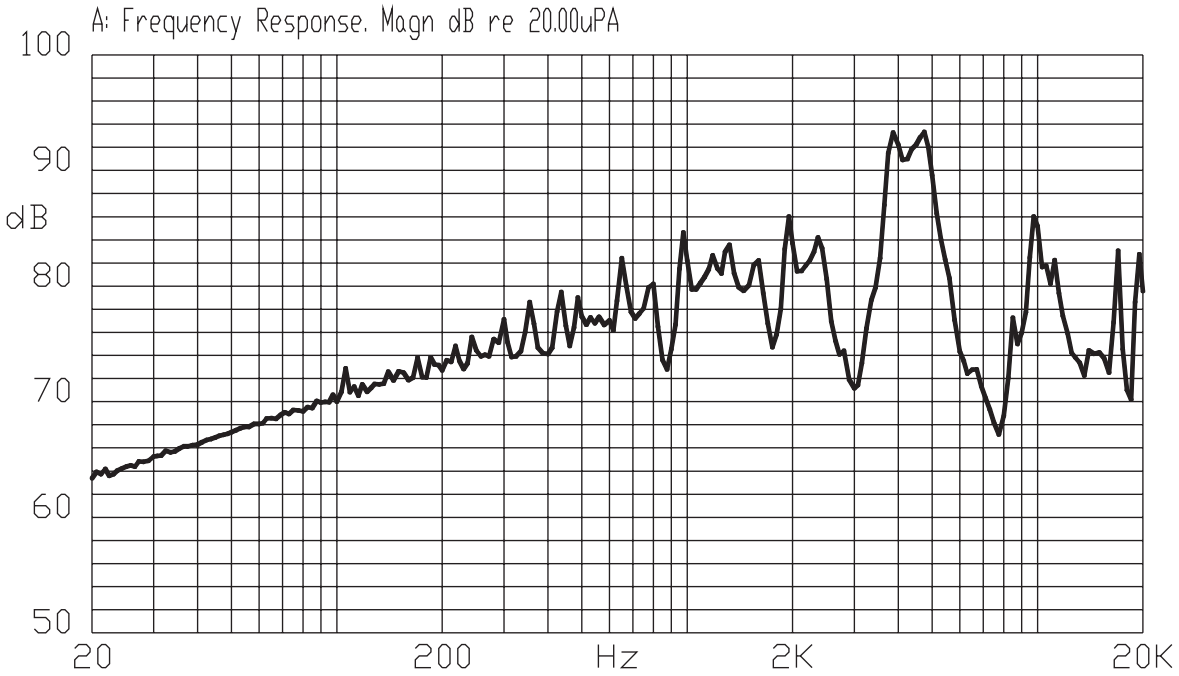

APPLICATION CIRCUIT

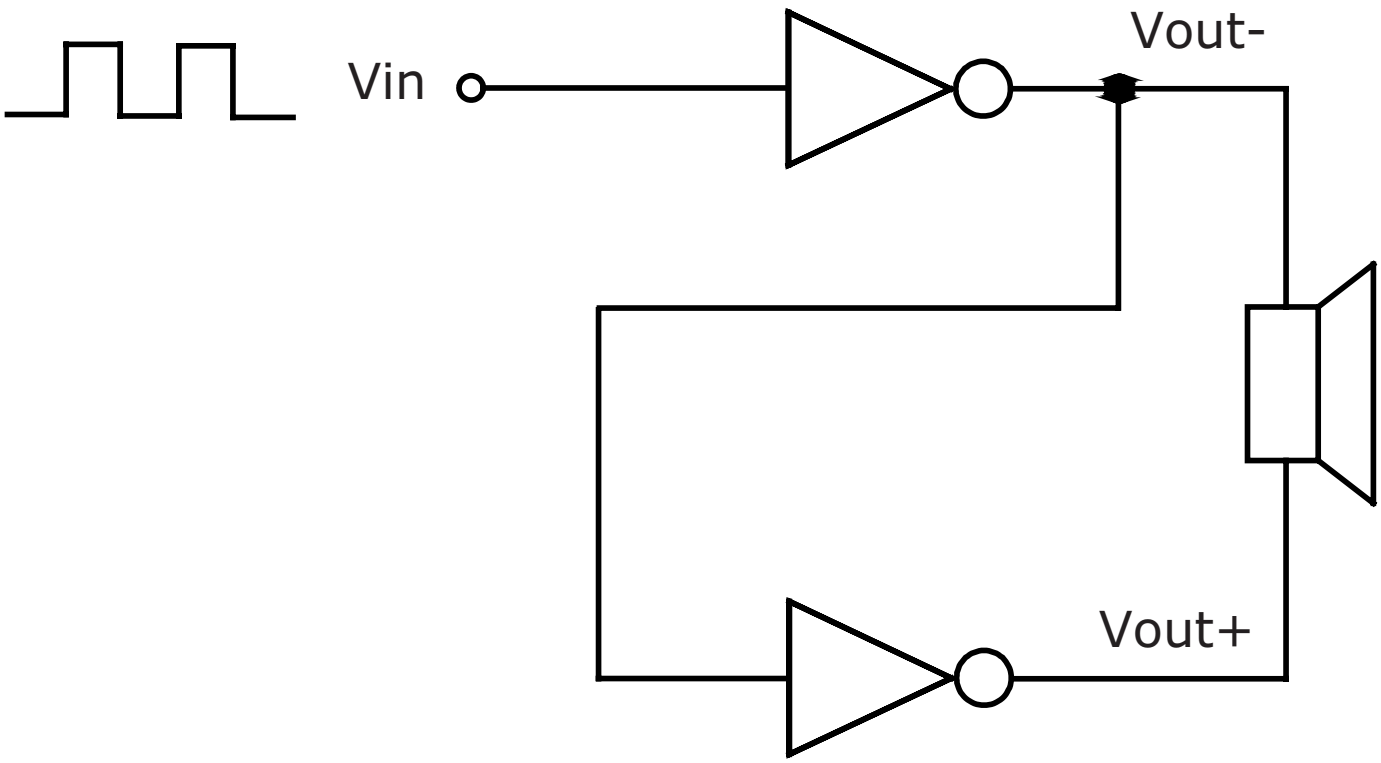

PACKAGING

units: mm

Tray Size: 184 x 180 x 23 mm
Carton Size: 440 x 400 x 310 mm
Tray QTY: 100 pcs per tray
Carton QTY: 6,000 pcs per carton

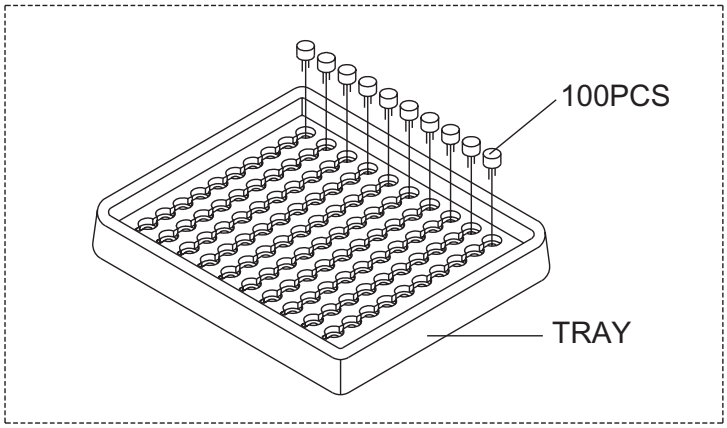

Lot No.	XXXXXXXXXX
Part No.	XXXXXXXXXX XXXXXXXXXX
Quantity.	XXXX Pcs
Date: DD MM YY	RoHs Compliant
MADE IN CHINA	
CUI DEVICES	

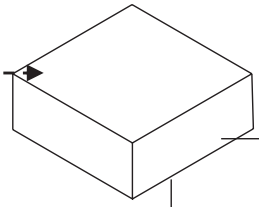

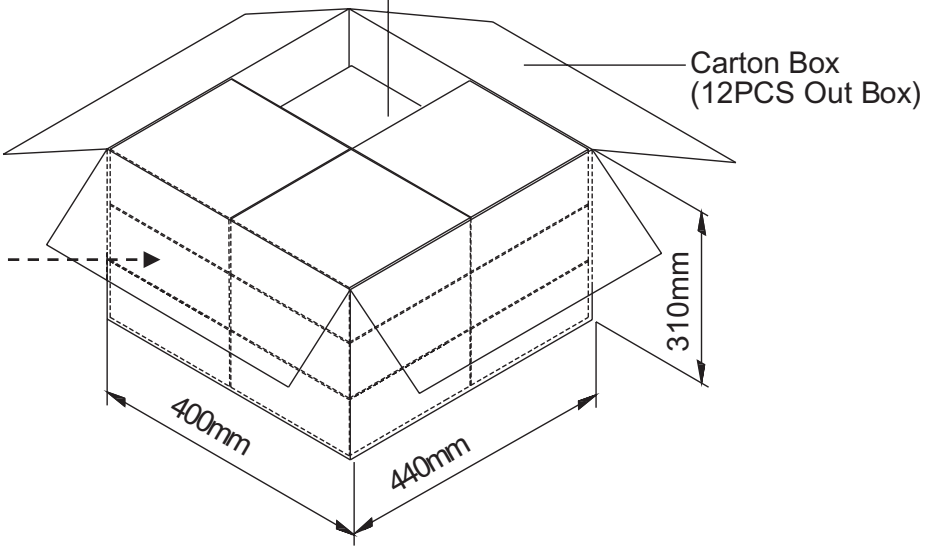

REVISION HISTORY

rev.	description	date
1.0	initial release	07/07/2021
1.01	logo, datasheet style update	08/05/2022

The revision history provided is for informational purposes only and is believed to be accurate.

CUI Devices offers a one (1) year limited warranty. Complete warranty information is listed on our website.

CUI Devices reserves the right to make changes to the product at any time without notice. Information provided by CUI Devices is believed to be accurate and reliable. However, no responsibility is assumed by CUI Devices for its use, nor for any infringements of patents or other rights of third parties which may result from its use.

CUI Devices products are not authorized or warranted for use as critical components in equipment that requires an extremely high level of reliability. A critical component is any component of a life support device or system whose failure to perform can be reasonably expected to cause the failure of the life support device or system, or to affect its safety or effectiveness.

cuidevices.com