CUDEVICES

MODEL: CPT-3010-95-L200 | **DESCRIPTION:** PIEZO BUZZER TRANSDUCER

FEATURES

- piezo
- 95 dB @ 0.1 m
- screw holes for mounting



RoHS

SPECIFICATIONS

parameter	conditions/description	min	typ	max	units
rated voltage	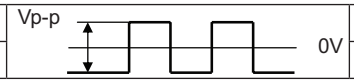		12		Vp-p
operating voltage				30	Vp-p
current consumption	at rated voltage, 3,300 Hz, square wave			20	mA
rated frequency			3,300		Hz
sound pressure level	at 10 cm, rated voltage, 3,300 Hz, ½ duty square wave	95			dB
electrostatic capacitance	at 100 Hz, 1 V	17,500	25,000	32,500	pF
dimensions	Ø30.0 x 10.0				mm
weight				7.0	g
material	PBT + 15% GF (black)				
terminal	wire leads				
operating temperature		-40		85	°C
storage temperature		-40		85	°C
washable	no				
RoHS	yes				

Notes: 1. All specifications measured at 5~35 °C, humidity at 45~85%, under 86~106 kPa pressure, unless otherwise noted.

SOLDERABILITY

parameter	conditions/description	min	typ	max	units
hand soldering	for maximum 2 seconds	330		380	°C

MECHANICAL DRAWING

units: mm
tolerance: ±0.5 mm

wire: UL 1571, 28 AWG

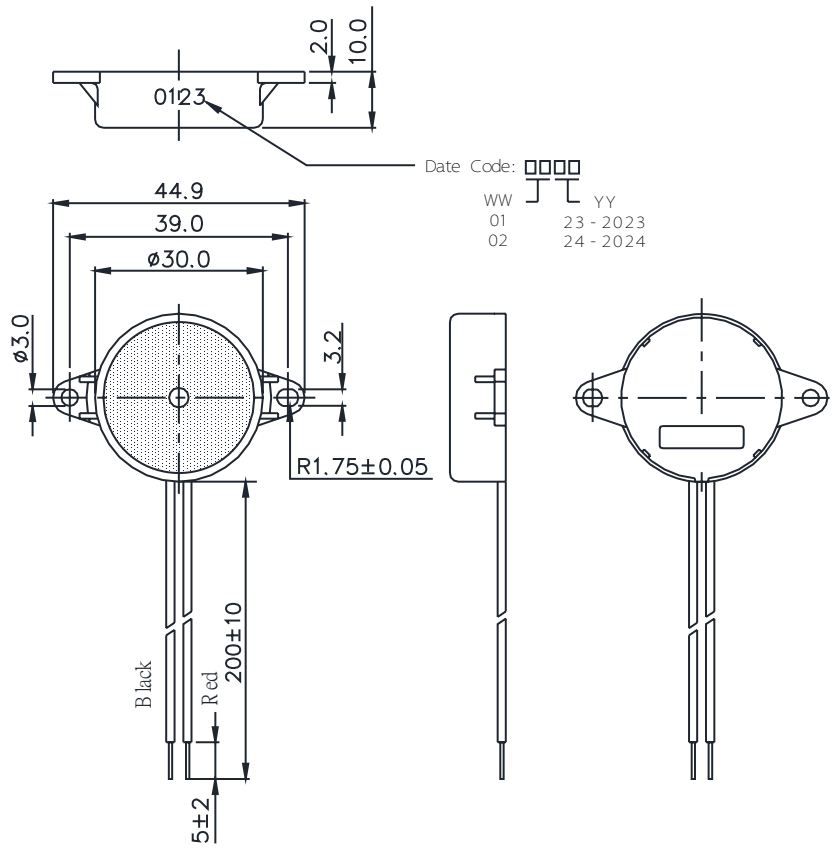

FREQUENCY RESPONSE CURVE

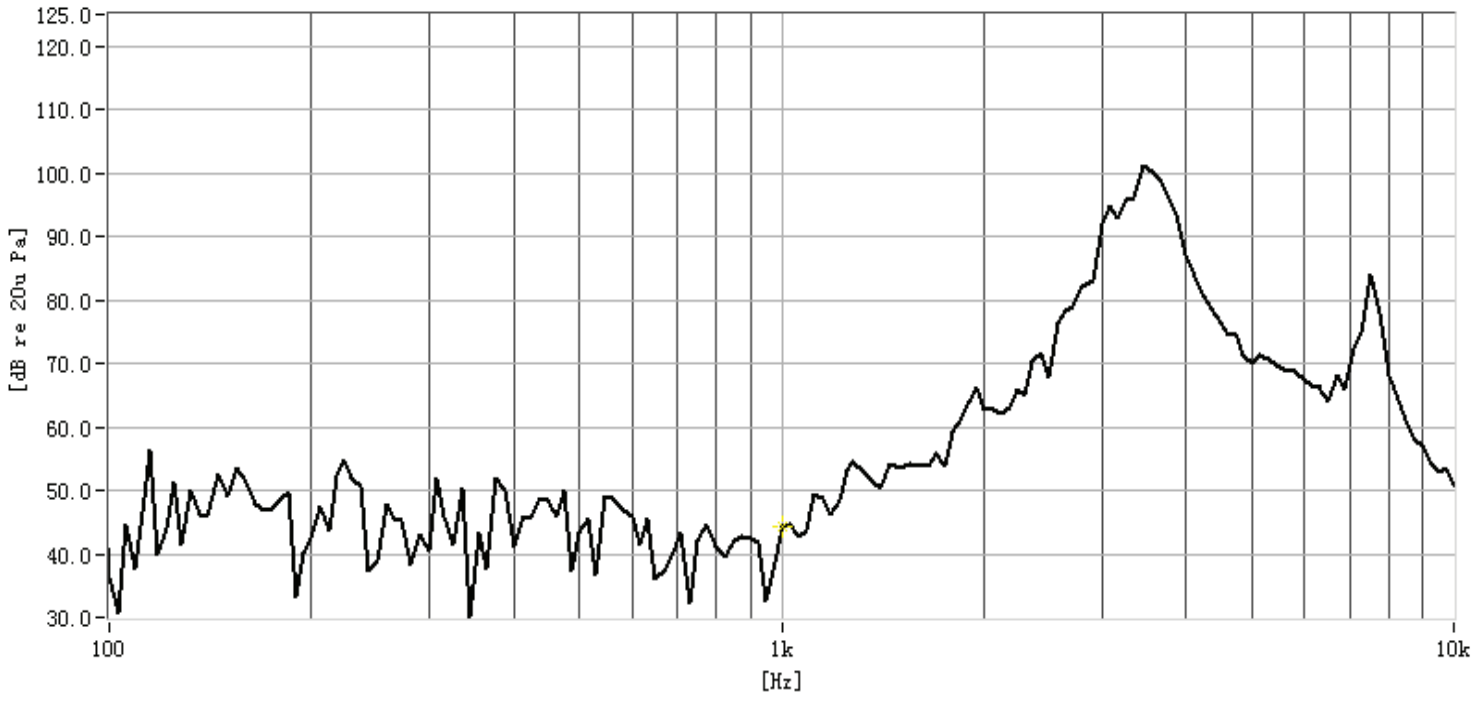

REVISION HISTORY

rev.	description	date
1.0	initial release	12/19/2023

The revision history provided is for informational purposes only and is believed to be accurate.

CUI Devices offers a one (1) year limited warranty. Complete warranty information is listed on our website.

CUI Devices reserves the right to make changes to the product at any time without notice. Information provided by CUI Devices is believed to be accurate and reliable. However, no responsibility is assumed by CUI Devices for its use, nor for any infringements of patents or other rights of third parties which may result from its use.

CUI Devices products are not authorized or warranted for use as critical components in equipment that requires an extremely high level of reliability. A critical component is any component of a life support device or system whose failure to perform can be reasonably expected to cause the failure of the life support device or system, or to affect its safety or effectiveness.

cuidevices.com