CUDEVICES

MODEL: CPT-3055-90PM | **DESCRIPTION:** PIEZO BUZZER TRANSDUCER

FEATURES

- SPL 90 dB
- piezo
- externally driven
- panel mount with 120 mm lead wire



RoHS

SPECIFICATIONS

parameter	conditions/description	min	typ	max	units
rated voltage	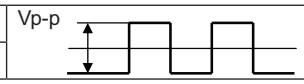		12		Vp-p
operating voltage		1		30	Vp-p
current consumption	at rated voltage, 2,500 Hz, ½ duty square wave			15	mA
rated frequency			2,500		Hz
sound pressure level	at 10 cm, rated voltage, 2,500 Hz, ½ duty square wave	80			dB
electrostatic capacitance	at 120 Hz	31,500	45,000	58,500	pF
dimensions	Ø30.0 x 5.5				mm
weight			3.5		g
material	ABS				
terminal	wire leads				
operating temperature		-20		60	°C
storage temperature		-30		70	°C
RoHS	yes				

Notes: 1. All specifications measured at 25±3°C, humidity at 60~70%, under 86~106 kPa pressure, unless otherwise noted.

SOLDERABILITY

parameter	conditions/description	min	typ	max	units
hand soldering		370	380	390	°C

MECHANICAL DRAWING

units: mm
tolerance: ±0.5 mm

wire: UL 1095 28 AWG

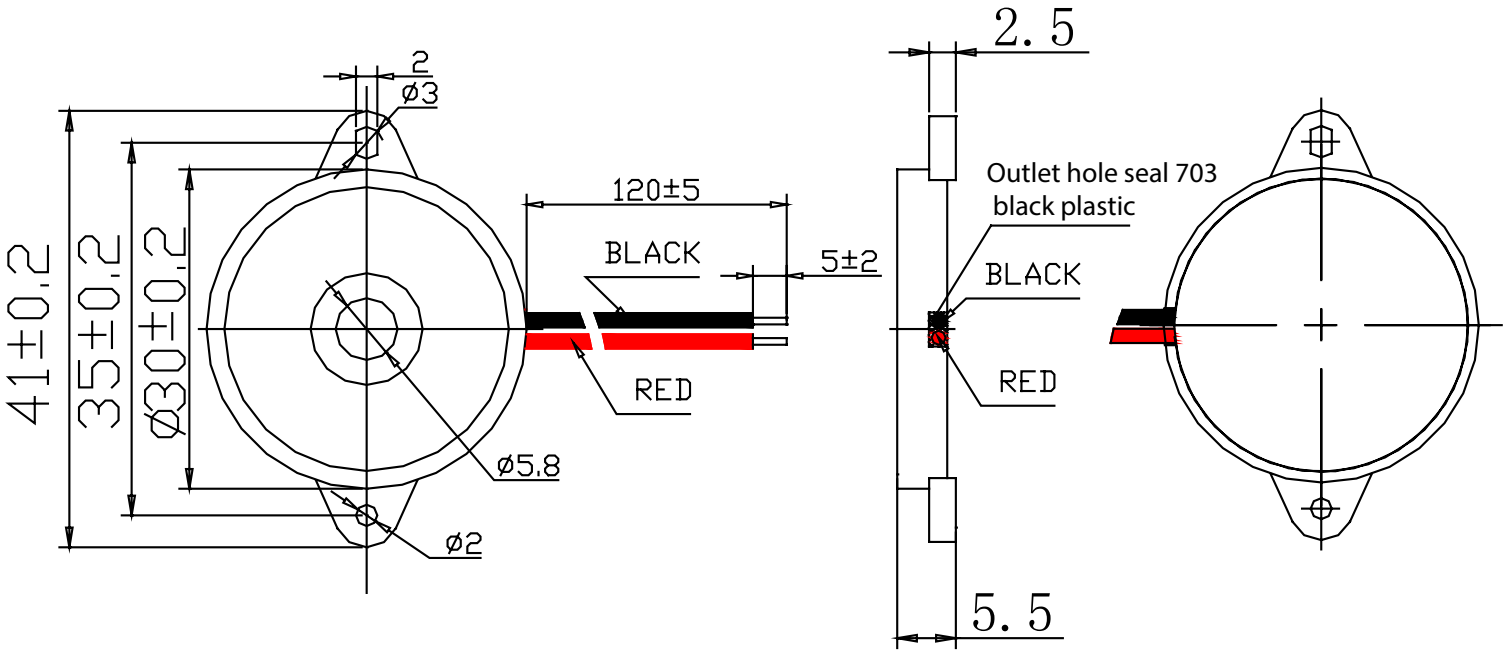

FREQUENCY RESPONSE CURVE

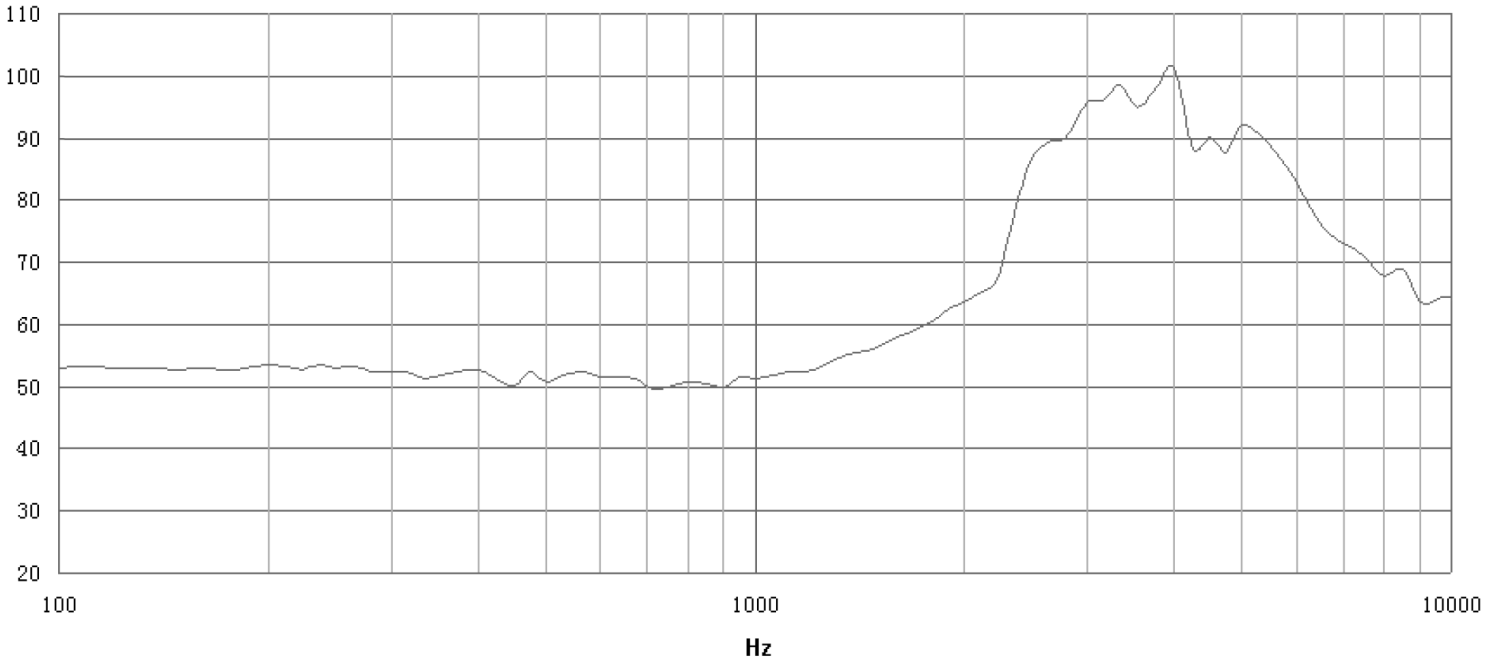

APPLICATION CIRCUIT

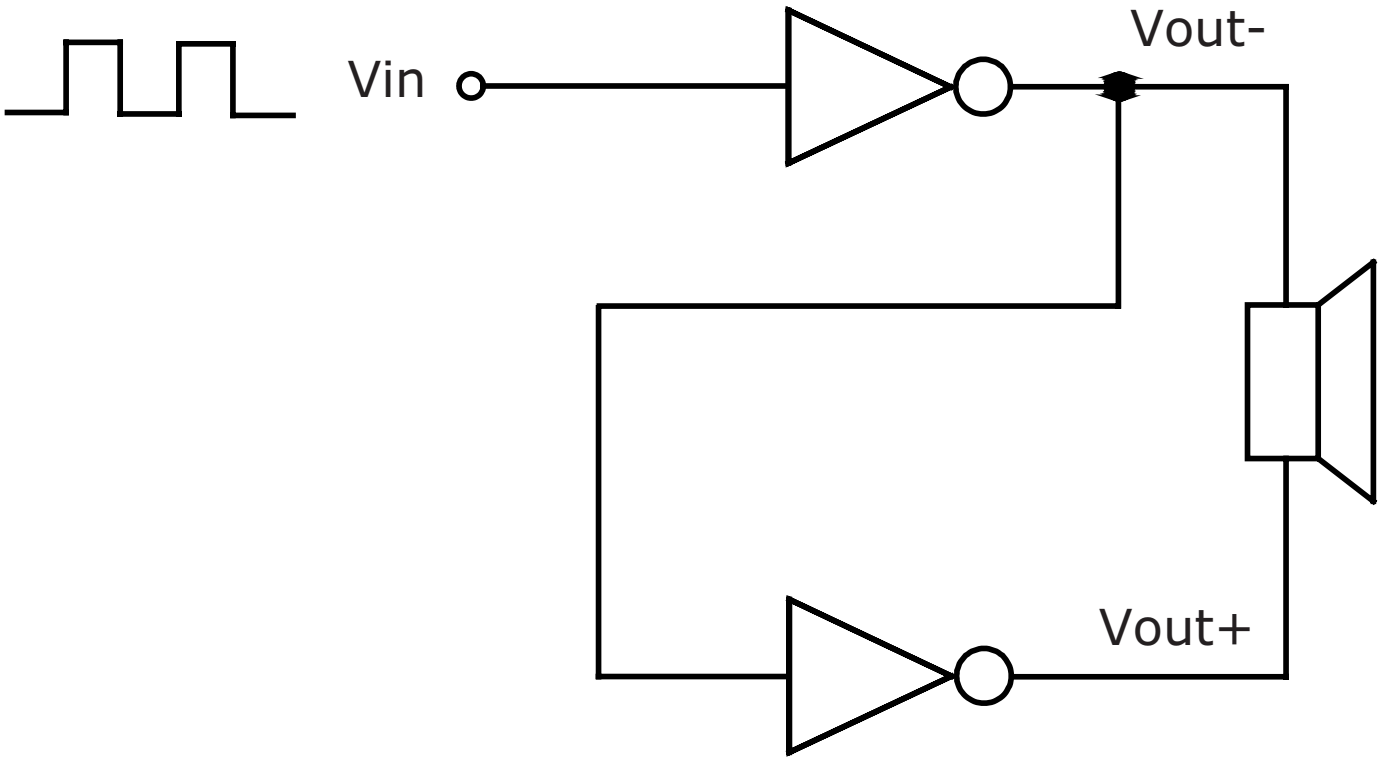

PACKAGING

units: mm

Carton Size: 500 x 250 x 445 mm
Carton QTY: 2,000 pcs per carton

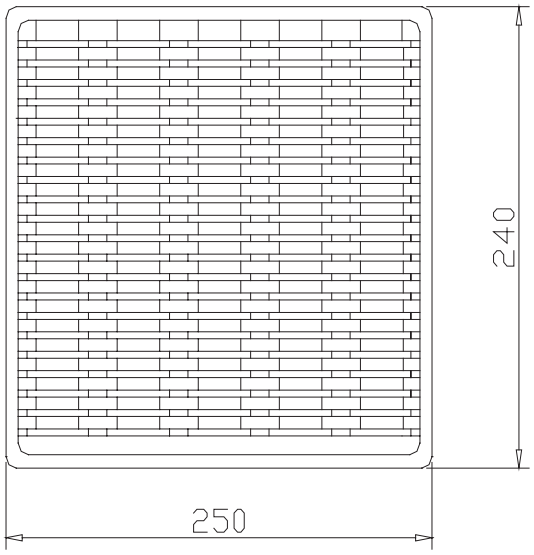

100PCS/board

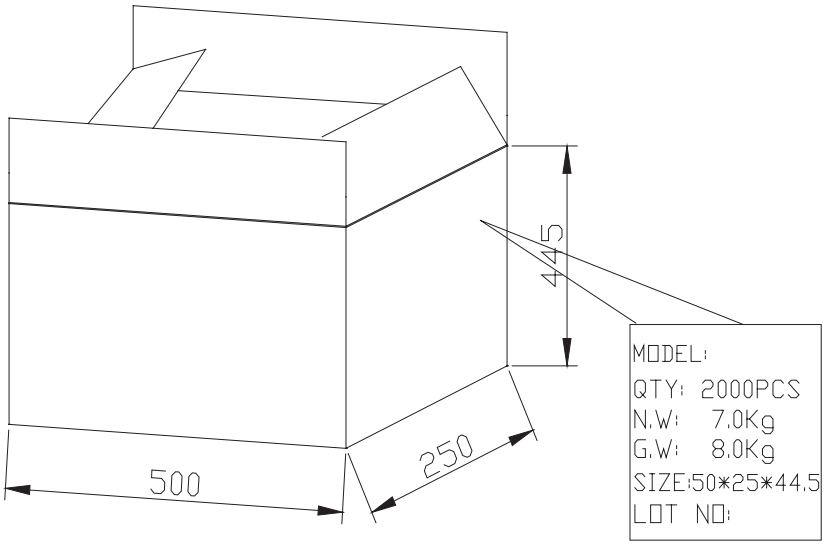

REVISION HISTORY

rev.	description	date
1.0	initial release	07/15/2019
1.01	brand update	01/03/2020
1.02	logo, datasheet style update	08/05/2022

The revision history provided is for informational purposes only and is believed to be accurate.

CUI Devices offers a one (1) year limited warranty. Complete warranty information is listed on our website.

CUI Devices reserves the right to make changes to the product at any time without notice. Information provided by CUI Devices is believed to be accurate and reliable. However, no responsibility is assumed by CUI Devices for its use, nor for any infringements of patents or other rights of third parties which may result from its use.

CUI Devices products are not authorized or warranted for use as critical components in equipment that requires an extremely high level of reliability. A critical component is any component of a life support device or system whose failure to perform can be reasonably expected to cause the failure of the life support device or system, or to affect its safety or effectiveness.

cuidevices.com