CUI Devices is now Same Sky! Learn More

MODEL: CSQ-706BP | DESCRIPTION: MAGNETIC BUZZER TRANSDUCER

FEATURES

- through hole
- 70 dB
- externally driven



RoHS

SPECIFICATIONS

parameter	conditions/description	min	typ	max	units
rated voltage	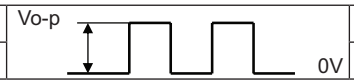		1.5		Vo-p
operating voltage		1.0		2.0	Vo-p
current consumption	at rated voltage, 2,048 Hz square wave, ½ duty			20	mA
rated frequency			2,048		Hz
sound pressure level	at 10 cm (A-weight), rated voltage, 2,048 Hz square wave, ½ duty	70	75		dBA
coil resistance		42.5	50.0	57.5	Ω
dimensions	Ø12.0 x 5.5				mm
weight			1.2		g
material	PPO				
terminal	pin type (Au plating)				
operating temperature		-20		60	°C
storage temperature		-30		70	°C
RoHS	yes				

Notes: 1. All specifications measured at 5~35°C, humidity at 45~85%, under 86~106kPa pressure, unless otherwise noted.

SOLDERABILITY

parameter	conditions/description	min	typ	max	units
hand soldering[2]	for maximum 2 seconds	330		380	°C

Notes: 2. Not recommended for wave soldering

MECHANICAL DRAWING

units: mm
tolerance: ±0.5 mm

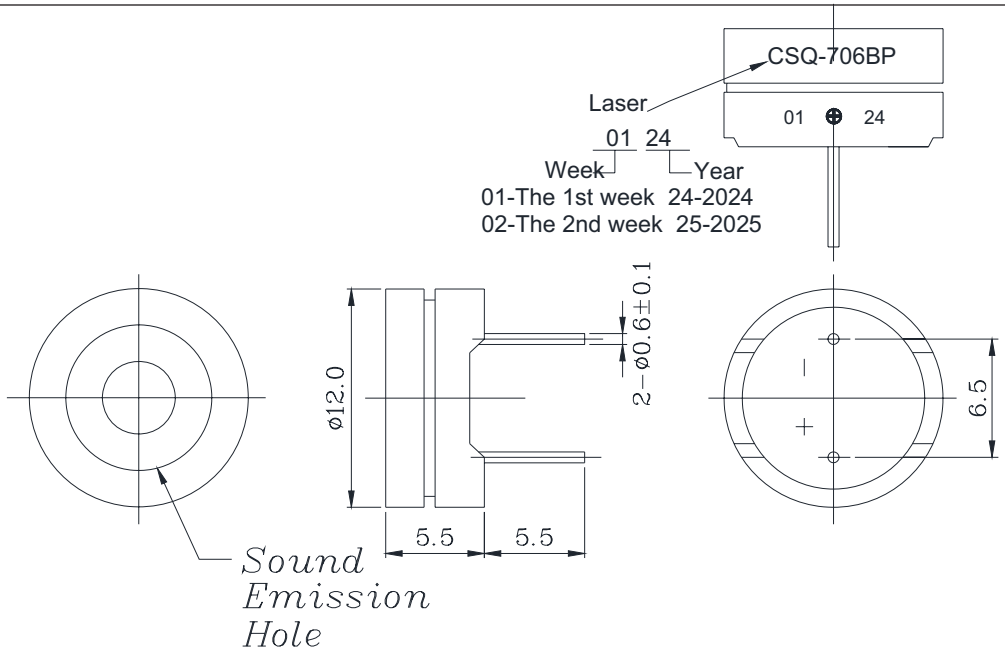

FREQUENCY RESPONSE CURVE

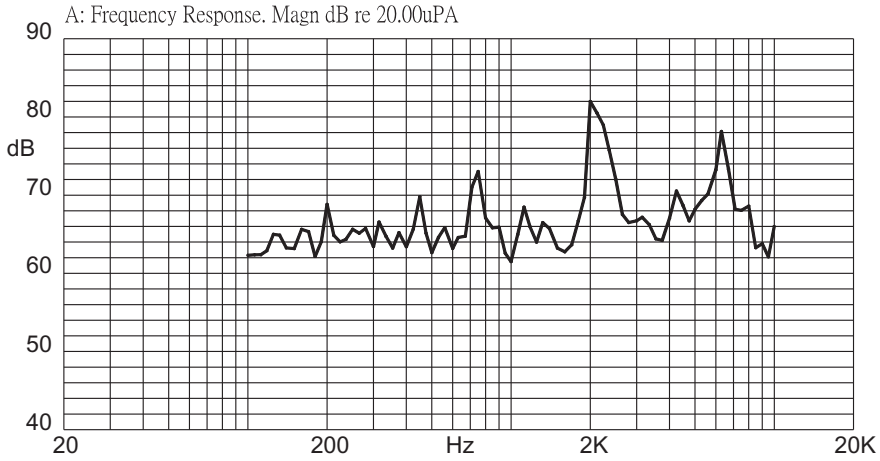

MEASUREMENT METHOD

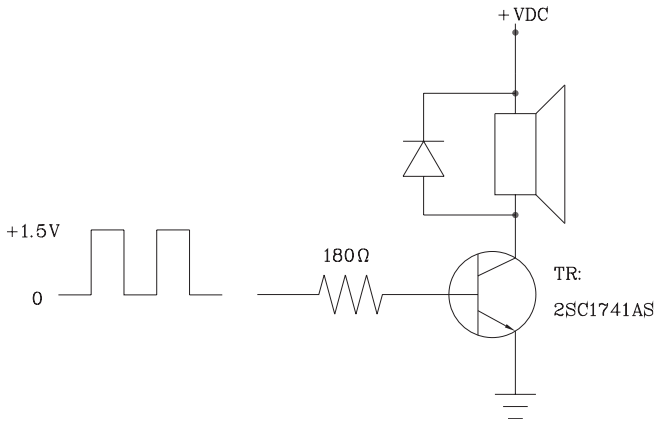

PACKAGING

units: mm

Tray Size: 184 x 184 x 23 mm
Carton Size: 440 x 400 x 310 mm
Tray QTY: 100 pcs per tray
Carton QTY: 6,000 pcs per carton

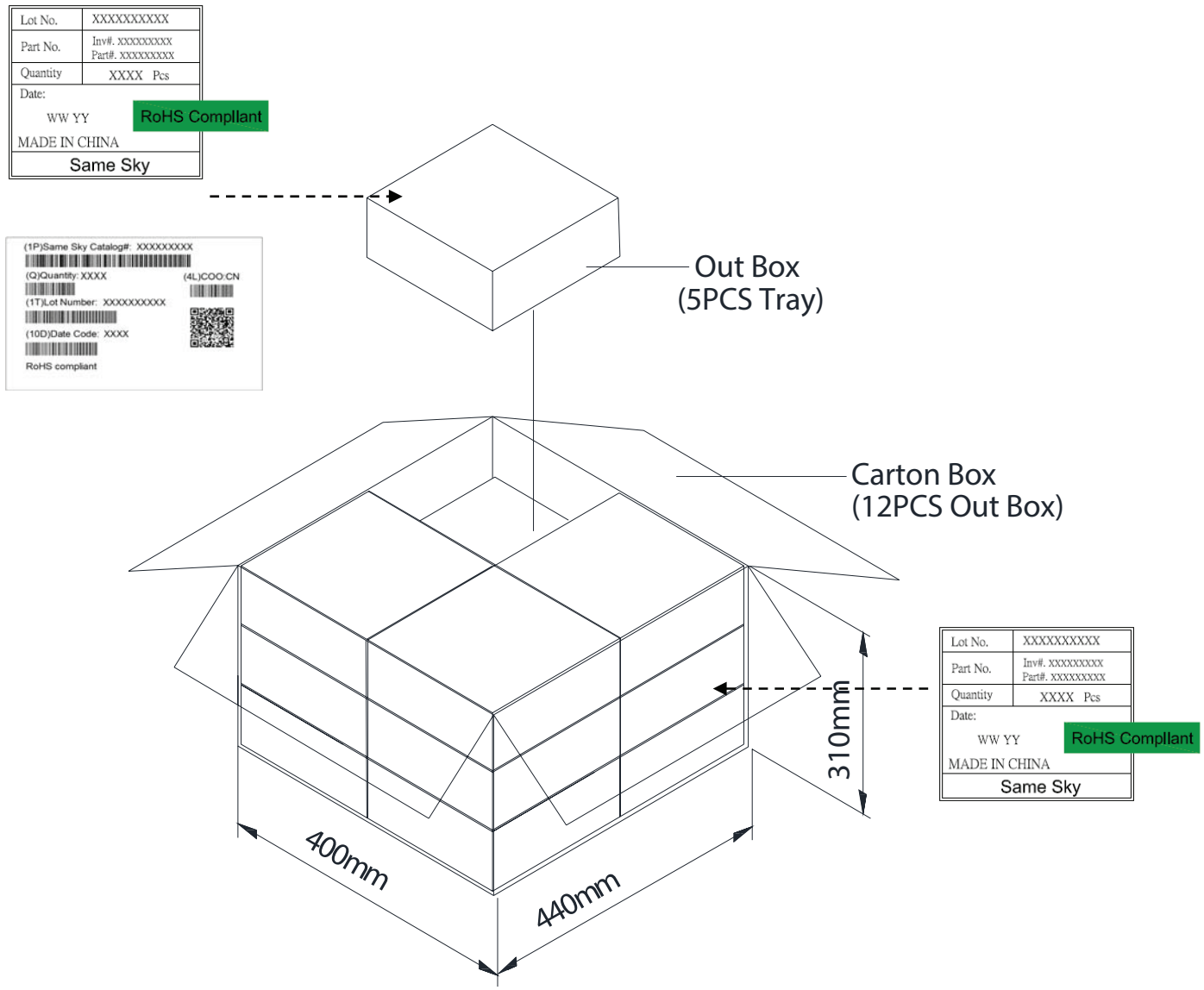

REVISION HISTORY

rev.	description	date
1.0	initial release	01/26/2006
1.01	updated datasheet	07/31/2019
1.02	logo, datasheet style update	08/05/2022
1.03	CUI Devices rebranded to Same Sky	09/11/2024
1.04	changed to laser print marking	02/11/2025

The revision history provided is for informational purposes only and is believed to be accurate.

Same Sky offers a one (1) year limited warranty. Complete warranty information is listed on our website.

Same Sky reserves the right to make changes to the product at any time without notice. Information provided by Same Sky is believed to be accurate and reliable. However, no responsibility is assumed by Same Sky for its use, nor for any infringements of patents or other rights of third parties which may result from its use.

Same Sky products are not authorized or warranted for use as critical components in equipment that requires an extremely high level of reliability. A critical component is any component of a life support device or system whose failure to perform can be reasonably expected to cause the failure of the life support device or system, or to affect its safety or effectiveness.