CUI Devices is now Same Sky! Learn More

MODEL: CSS-73B16K-SMT-TR | DESCRIPTION: MAGNETIC BUZZER TRANSDUCER

FEATURES

- surface mount
- side sound port
- externally driven



RoHS

SPECIFICATIONS

parameter	conditions/description	min	typ	max	units
rated voltage	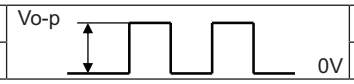		3.6		Vo-p
operating voltage		2.5		4.5	Vo-p
current consumption	at rated voltage, 2,730 Hz square wave, ½ duty			100	mA
rated frequency			2,730		Hz
sound pressure level	at 10 cm (A-weight), rated voltage, 2,730 Hz square wave, ½ duty	87	92		dBA
coil resistance		13.6	16	18.4	Ω
dimensions	8.5 x 8.5 x 4				mm
weight			0.6		g
material	LCP (white)				
terminal	SMT type (Au plating)				
operating temperature		-30		70	°C
storage temperature		-40		85	°C
RoHS	yes				

Notes: 1. All specifications measured at 5~35°C, humidity at 45~85%, under 86~106 kPa pressure, unless otherwise noted.

SOLDERABILITY

parameter	conditions/description	min	typ	max	units
reel storage	at relative humidity <60%			30	°C
reflow soldering[2]	see recommended reflow soldering profile			260	°C
drying conditions[3]	bake at 40°C for 24 hours				

Note: 2. It is recommended to reflow solder within 48 hours from opening vacuum packaging at a temperature <30°C & relative humidity <60%.
3. When out of packaging for more than 48 hours.

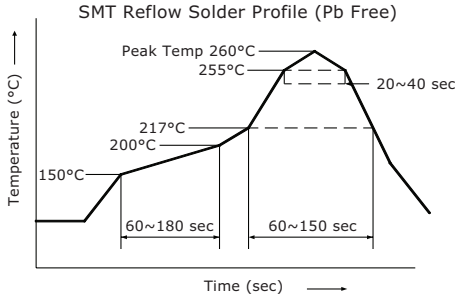

MECHANICAL DRAWING

units: mm
tolerance: ±0.5 mm

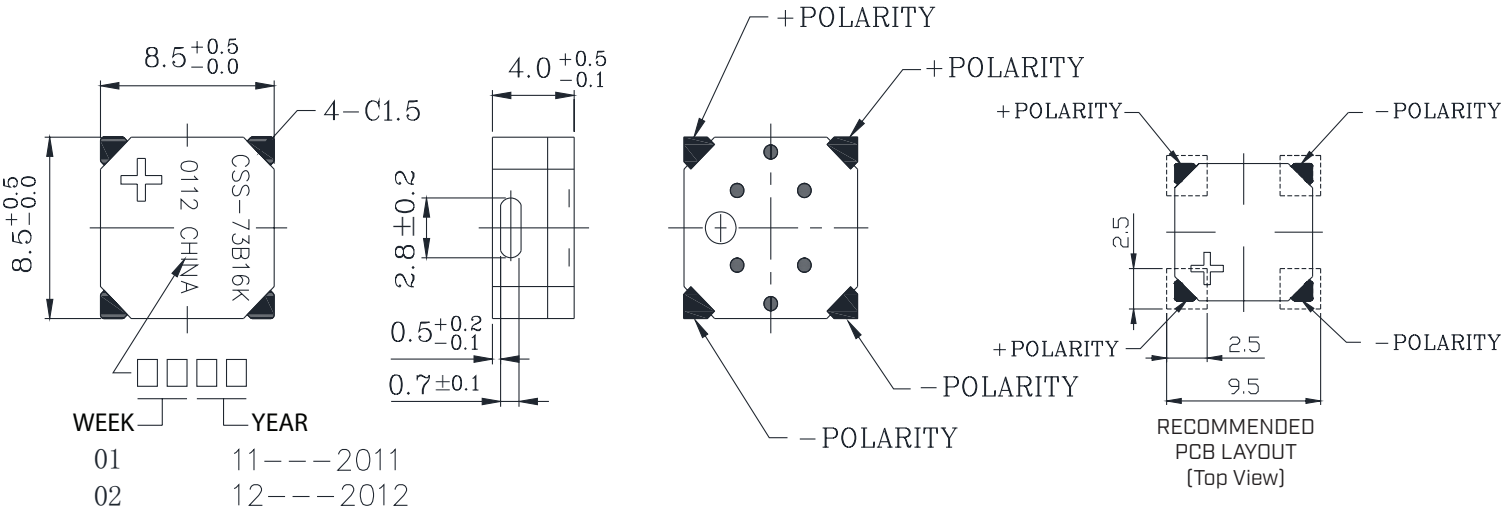

FREQUENCY RESPONSE CURVE

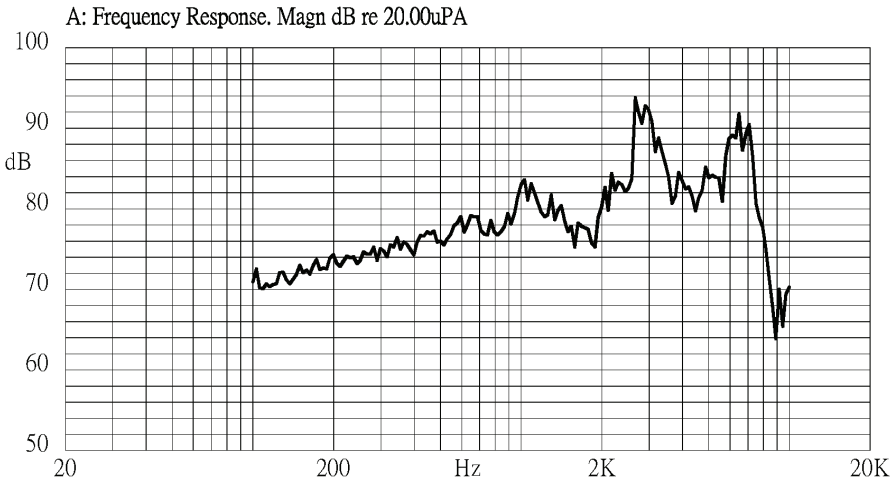

MEASUREMENT METHOD

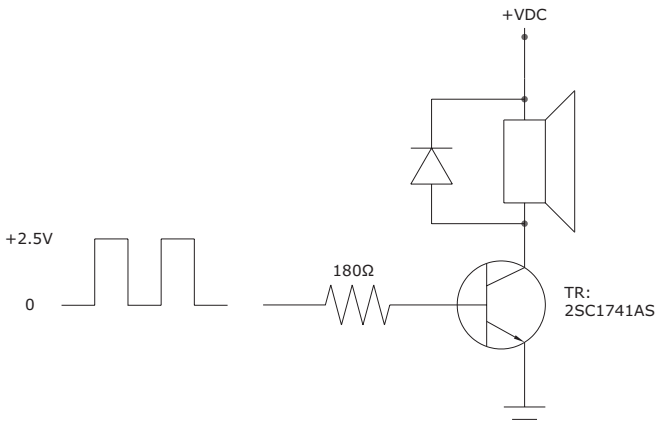

PACKAGING

units: mm

Reel Size: Ø330 mm
Inner Box Size: 340 x 340 x 33 mm
Carton Size: 350 x 175 x 355 mm
Reel QTY: 1,000 pcs per reel
Carton QTY: 5,000 pcs per carton

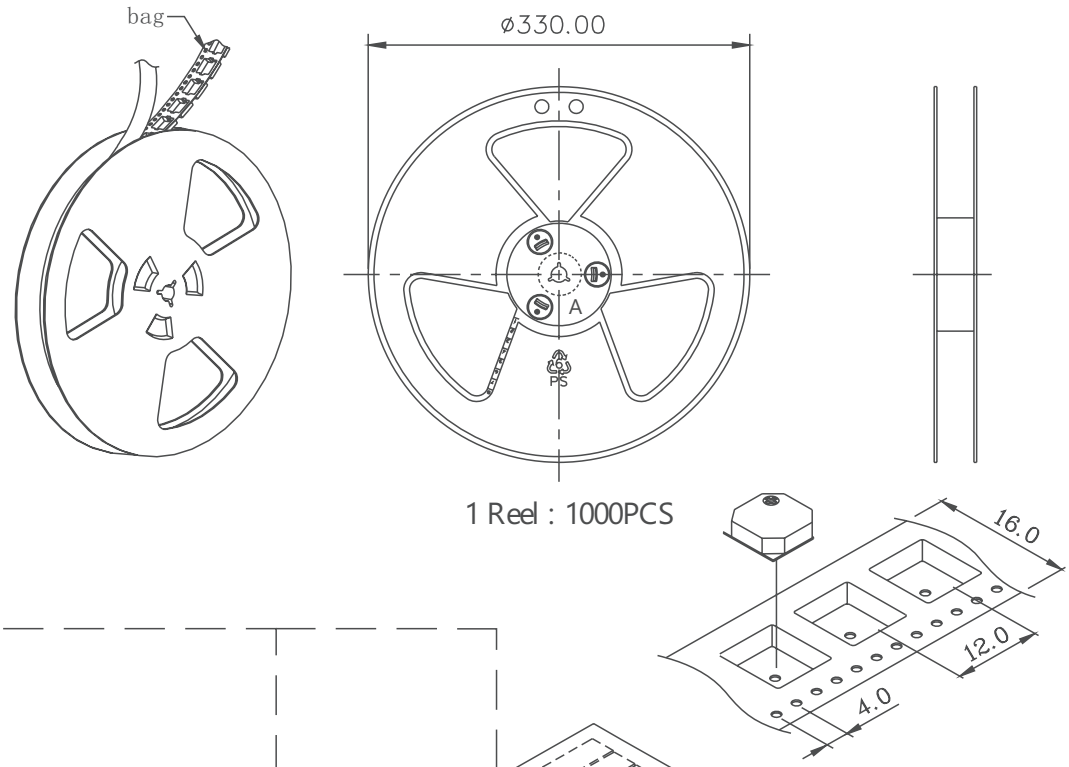

Lot No.	XXXXXXXXXX
Part No.	XXXXXXXXXX XXXXXXXXXX
Quantity.	XXXX Pcs
Date: DD MM YY RoHs Compliant	
MADE IN CHINA	

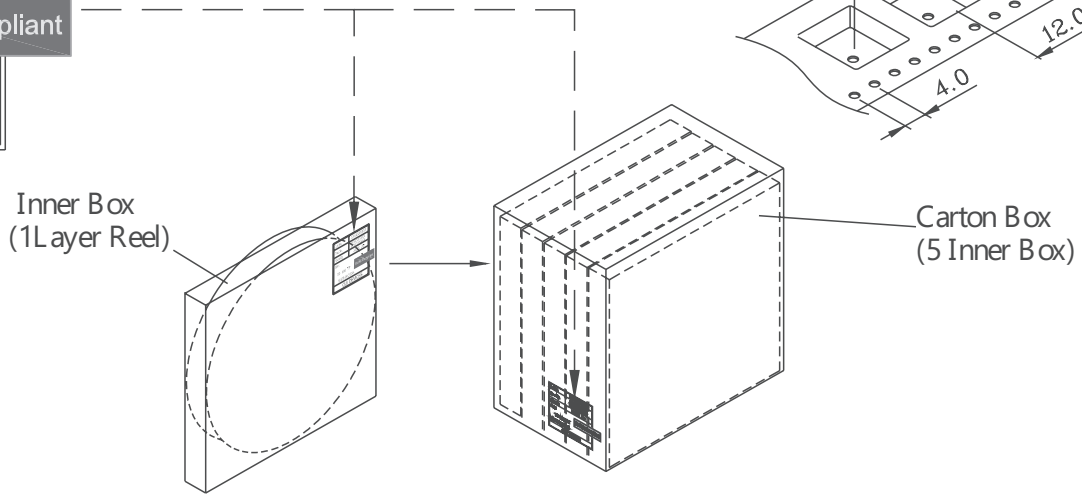

REVISION HISTORY

rev.	description	date
1.0	initial release	03/31/2006
1.01	updated part number, added TR package option, applied new spec template	05/03/2013
1.02	added storage and drying conditions, and tape and reel packaging details	08/01/2019
1.03	brand update	01/06/2020
1.04	modified housing base	03/22/2021
1.05	logo, datasheet style update	08/05/2022
1.0	CUI Devices rebranded to Same Sky	09/11/2024

The revision history provided is for informational purposes only and is believed to be accurate.

same sky

Same Sky offers a one (1) year limited warranty. Complete warranty information is listed on our website.

Same Sky reserves the right to make changes to the product at any time without notice. Information provided by Same Sky is believed to be accurate and reliable. However, no responsibility is assumed by Same Sky for its use, nor for any infringements of patents or other rights of third parties which may result from its use.

Same Sky products are not authorized or warranted for use as critical components in equipment that requires an extremely high level of reliability. A critical component is any component of a life support device or system whose failure to perform can be reasonably expected to cause the failure of the life support device or system, or to affect its safety or effectiveness.

sameskydevices.com