CUI Devices is now Same Sky! Learn More

MODEL: CST-911AP | DESCRIPTION: MAGNETIC BUZZER TRANSDUCER

FEATURES

- through hole
- 85 dB
- externally driven



RoHS

SPECIFICATIONS

parameter	conditions/description	min	typ	max	units
rated voltage	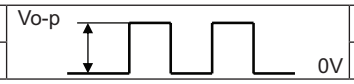		1.5		Vo-p
operating voltage		1.0		2.0	Vo-p
current consumption	at rated voltage, 2,730 Hz square wave, ½ duty			80	mA
rated frequency			2,730		Hz
sound pressure level	at 10 cm (A-weight), rated voltage, 2,730 Hz square wave, ½ duty	85	92		dBA
coil resistance		5.0	6.0	7.0	Ω
dimensions	Ø9.0 x 4.5				mm
weight			0.6		g
material	PPO				
terminal	pin type (Au plating)				
operating temperature		-20		60	°C
storage temperature		-30		70	°C
RoHS	yes				

Notes: 1. All specifications measured at 5~35°C, humidity at 45~85%, under 86~106kPa pressure, unless otherwise noted.

SOLDERABILITY

parameter	conditions/description	min	typ	max	units
hand soldering[2]	for maximum 2 seconds	330		380	°C

Notes: 2. Not recommended for wave soldering

MECHANICAL DRAWING

units: mm
tolerance: ±0.5 mm

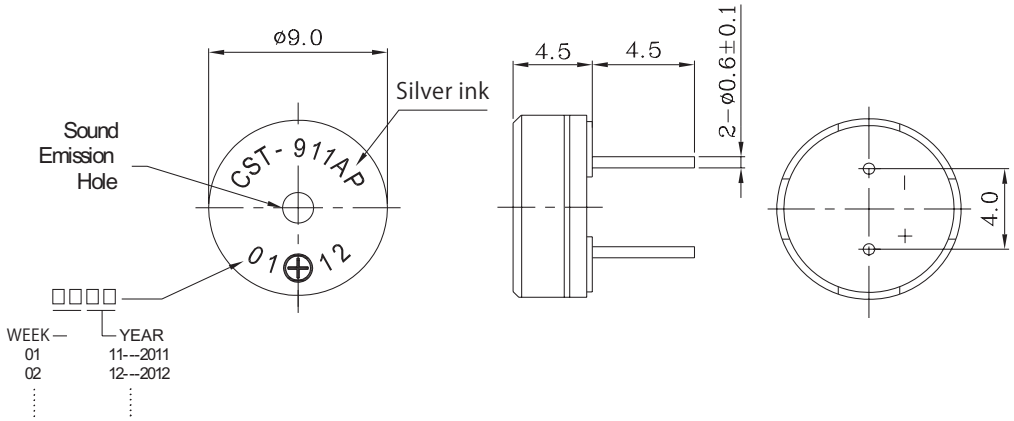

FREQUENCY RESPONSE CURVE

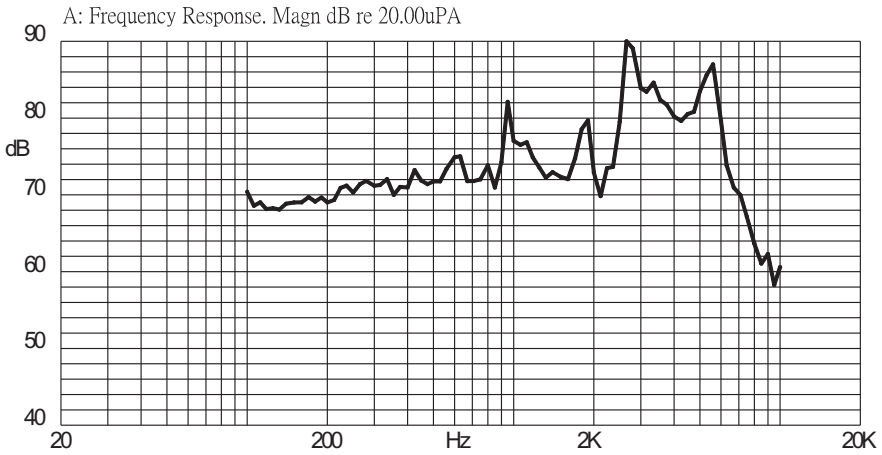

MEASUREMENT METHOD

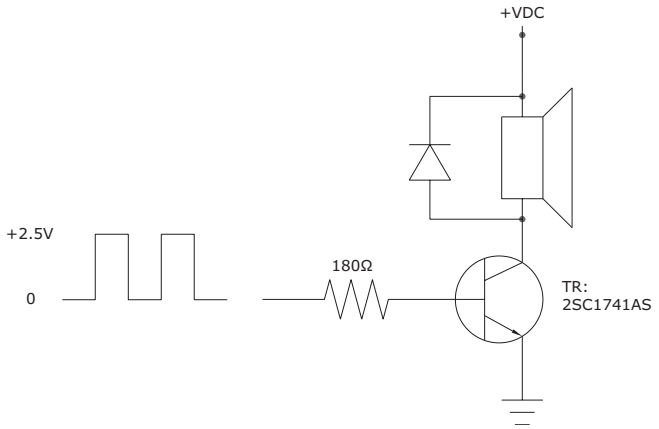

PACKAGING

Internal Tray Size: 184 x 184 x 23 mm
Carton Size: 440 x 400 x 310 mm
QTY: 8,400 pcs (700 x 12)

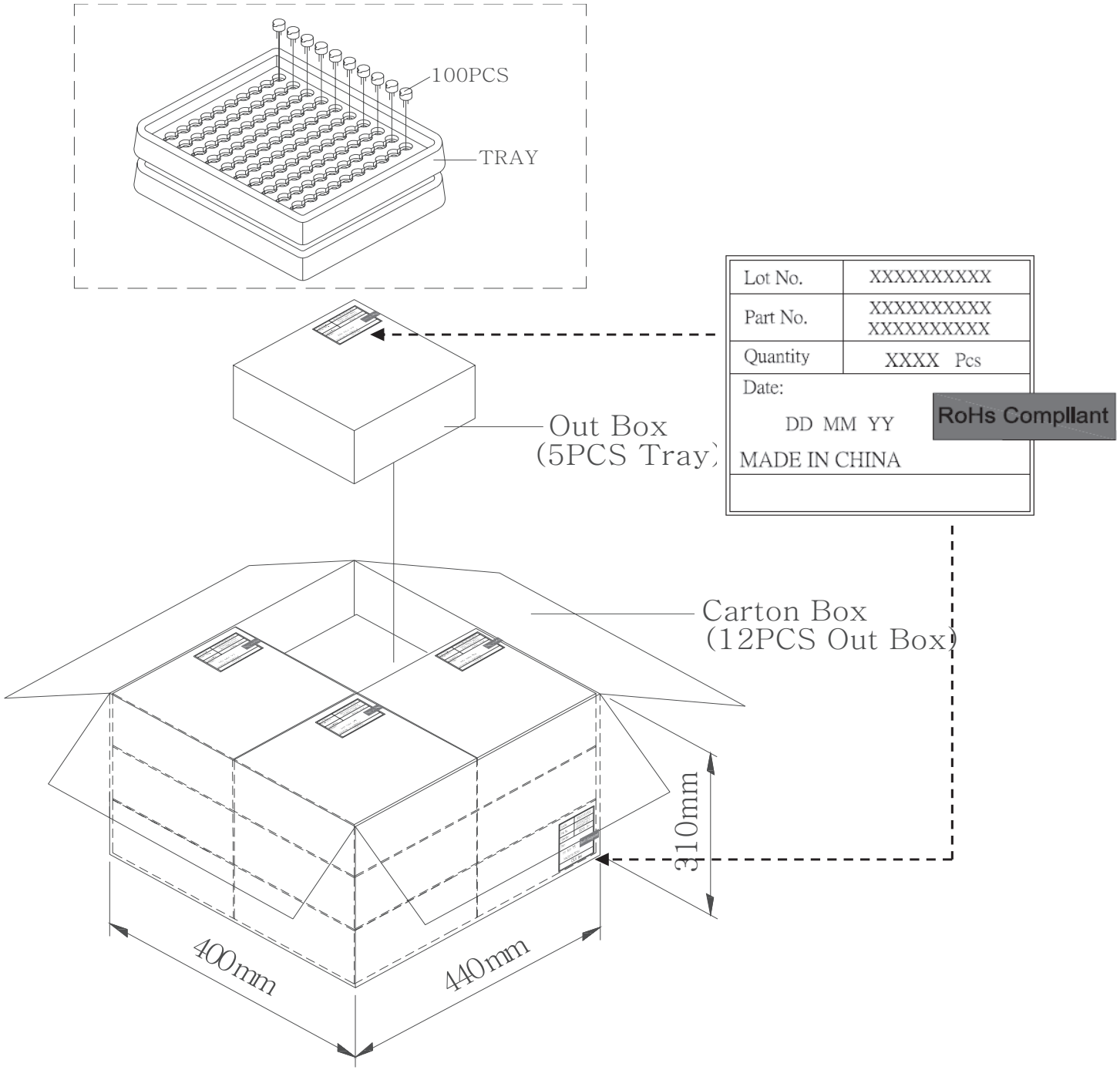

REVISION HISTORY

rev.	description	date
1.0	initial release	01/30/2006
1.01	updated datasheet	07/31/2019
1.02	brand update	03/18/2020
1.03	logo, datasheet style update	08/05/2022
1.04	CUI Devices rebranded to Same Sky	09/11/2024

The revision history provided is for informational purposes only and is believed to be accurate.

same sky

Same Sky offers a one (1) year limited warranty. Complete warranty information is listed on our website.

Same Sky reserves the right to make changes to the product at any time without notice. Information provided by Same Sky is believed to be accurate and reliable. However, no responsibility is assumed by Same Sky for its use, nor for any infringements of patents or other rights of third parties which may result from its use.

Same Sky products are not authorized or warranted for use as critical components in equipment that requires an extremely high level of reliability. A critical component is any component of a life support device or system whose failure to perform can be reasonably expected to cause the failure of the life support device or system, or to affect its safety or effectiveness.

sameskydevices.com