CUI Devices is now Same Sky! Learn More

same sky

MODEL: CT-1205C-SMT-TR | DESCRIPTION: MAGNETIC BUZZER INDICATOR

FEATURES

- high sound pressure level
- washable
- internally driven

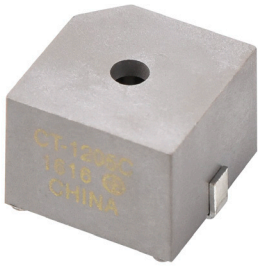

RoHS

SPECIFICATIONS

parameter	conditions/description	min	typ	max	units
rated voltage			5.0		Vdc
operating voltage		4.0		7.0	Vdc
current consumption				30	mA
rated frequency		2,250	2,400	2,550	Hz
sound pressure level	at 10 cm (A-weight free air), rated voltage	90	94		dBA
dimensions	12.8 x 12.8 x 10.0				mm
weight			2.0		g
material	PPS (S-206)				
terminal	SMT type (Sn plating)				
operating temperature		-30		70	°C
storage temperature		-40		85	°C
RoHS	yes				

Notes: 1. All specifications measured at 5~35°C, humidity at 45~85%, under 86~106 kPa pressure, unless otherwise noted.

SOLDERABILITY

parameter	conditions/description	min	typ	max	units
reel storage	at relative humidity <40%			25	°C
reflow soldering[2]	see recommended reflow soldering profile			260	°C
drying conditions[3]	bake at 40°C for 24 hours				

Note: 2. It is recommended to reflow solder within 48 hours from opening vacuum packaging at a temperature <30°C & relative humidity <60%.
3. When out of packaging for more than 48 hours.
4. Not recommended to exceed 1 reflow cycle.

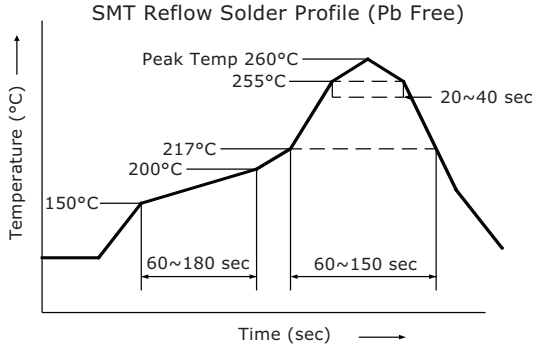

MECHANICAL DRAWING

units: mm
tolerance: ±0.5 mm

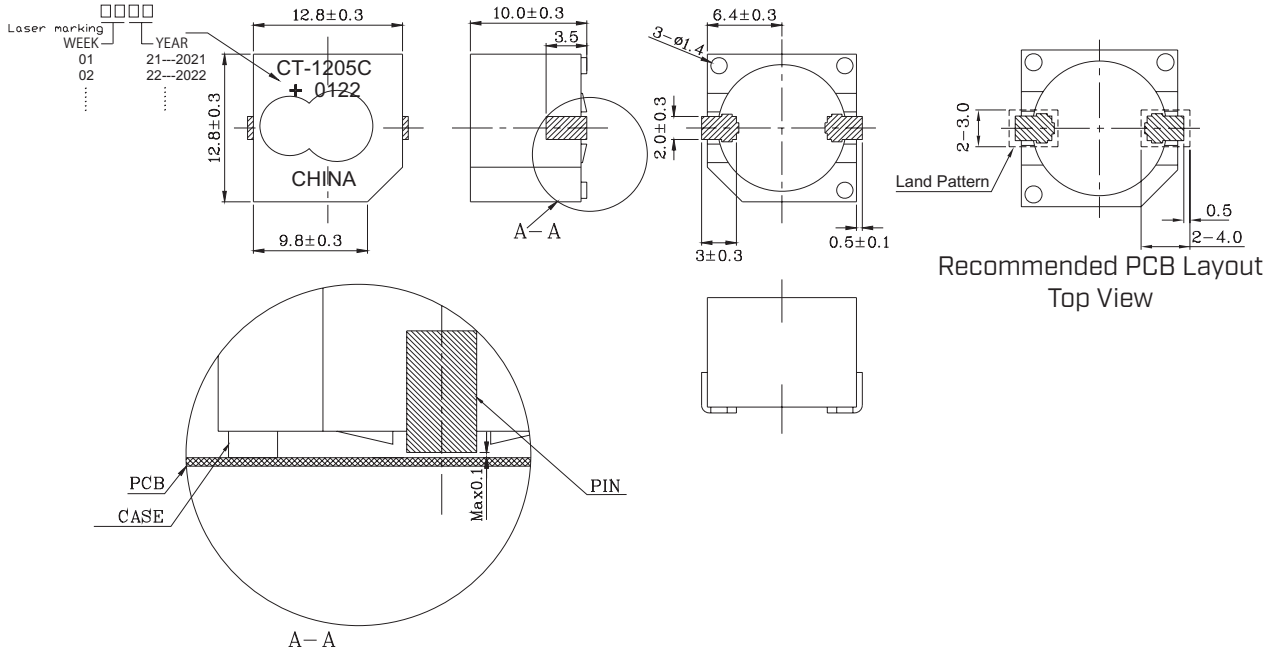

PERFORMANCE CURVES

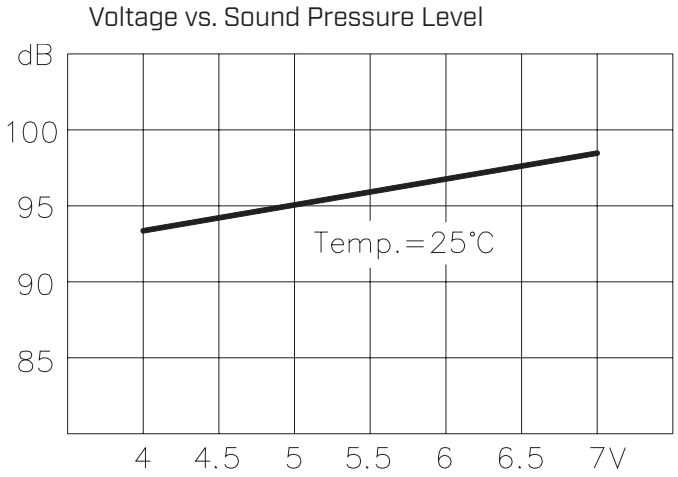

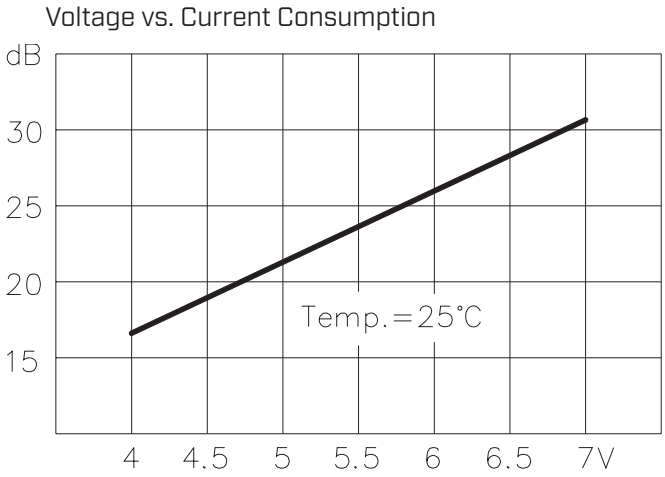

MEASUREMENT METHOD

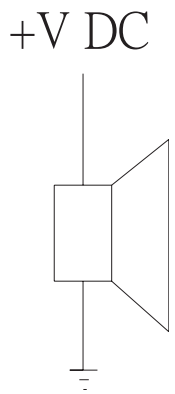

PACKAGING

units: mm

Reel Size: Ø330 mm
Inner Box Size: 340 x 340 x 33 mm
Carton Size: 350 x 175 x 355 mm
Reel QTY: 320 pcs per reel
Carton QTY: 1,600 pcs per carton

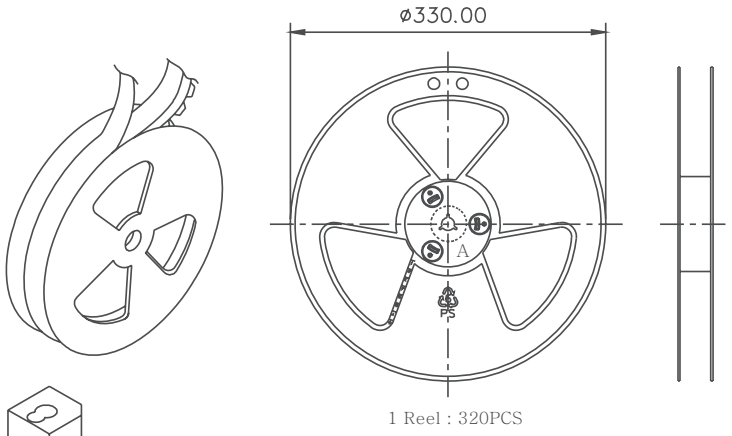

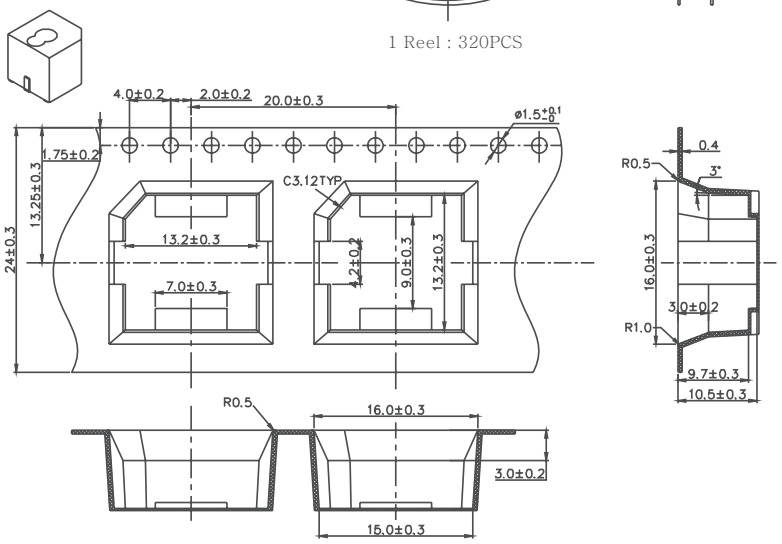

Lot No.	XXXXXXXXXX
Part No.	XXXXXXXXXX XXXXXXXXXX
Quantity	XXXX Pcs
Date: DD MM YY MADE IN CHINA	

RoHs Compliant

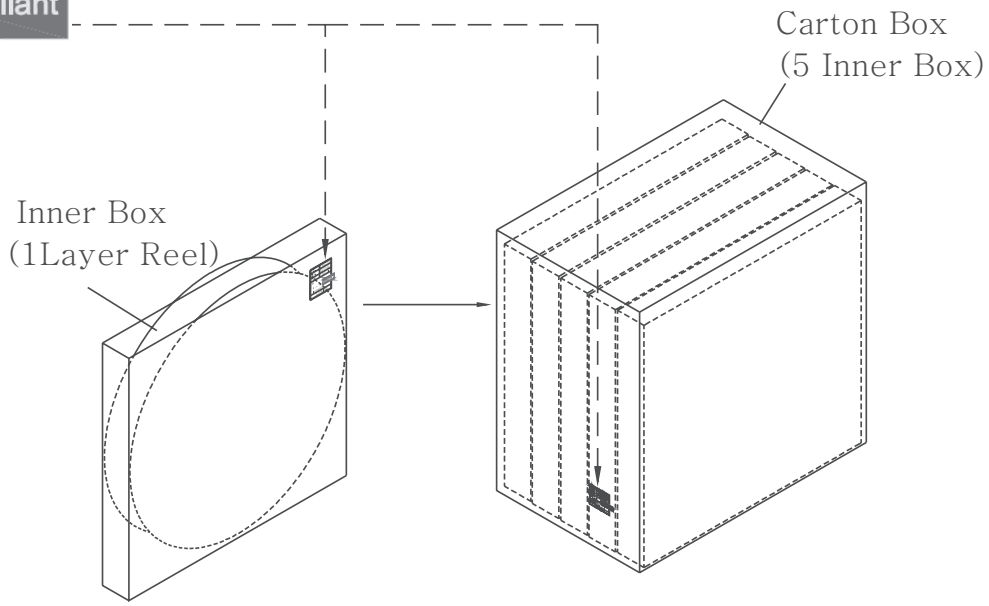

REVISION HISTORY

rev.	description	date
1.0	initial release	09/21/2006
1.01	new template applied, corrected performance curves	12/18/2012
1.02	updated part number, added TR package option	05/03/2013
1.03	added storage and drying conditions, and tape and reel packaging details	07/31/2019
1.04	brand update	01/07/2020
1.05	modified internal structure design, moved marking to top of part	02/11/2022
1.06	logo, datasheet style update	08/05/2022
1.07	added reflow soldering cycle details	11/14/2023
1.08	CUI Devices rebranded to Same Sky	09/12/2024

The revision history provided is for informational purposes only and is believed to be accurate.

same sky

Same Sky offers a one (1) year limited warranty. Complete warranty information is listed on our website.

Same Sky reserves the right to make changes to the product at any time without notice. Information provided by Same Sky is believed to be accurate and reliable. However, no responsibility is assumed by Same Sky for its use, nor for any infringements of patents or other rights of third parties which may result from its use.

Same Sky products are not authorized or warranted for use as critical components in equipment that requires an extremely high level of reliability. A critical component is any component of a life support device or system whose failure to perform can be reasonably expected to cause the failure of the life support device or system, or to affect its safety or effectiveness.

sameskydevices.com