CUI Devices is now Same Sky! Learn More

same sky

MODEL: PJ-012B | DESCRIPTION: DC POWER JACK

FEATURES

- 2.5 mm center pin
- 5.0 A rating
- right-angle orientation
- through hole

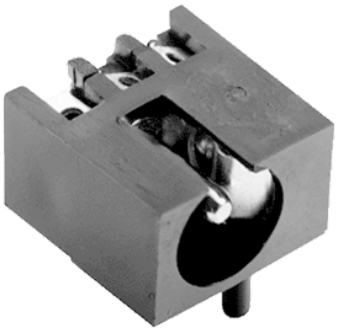

RoHS

SPECIFICATIONS

parameter	conditions/description	min	typ	max	units
rated input voltage			24		Vdc
rated input current				5.0	A
contact resistance[1]				30	mΩ
insulation resistance	at 500 Vdc	100			MΩ
voltage withstand	for 1 minute			500	Vac
insertion/withdrawal force		0.3		3	kg
operating temperature		-25		70	°C
life			5,000		cycles
flammability rating	UL94V-0				
RoHS	yes				

Note: 1. When measured at a current of less than 100 mA/1 kHz

SOLDERABILITY

parameter	conditions/description	min	typ	max	units
hand soldering	for 3~5 seconds			360	°C

MECHANICAL DRAWING

units: mm[inches]
tolerance: ±0.3 mm
unless otherwise noted

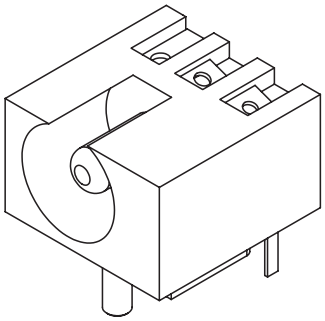

	MATERIAL	PLATING
center pin	copper	nickel
terminal 1	brass	silver
terminal 2	titanium copper alloy	silver
terminal 3	brass	silver
plastic	PBT	

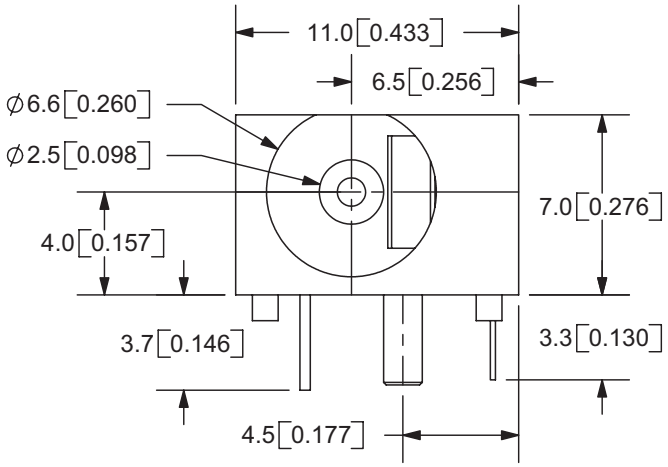

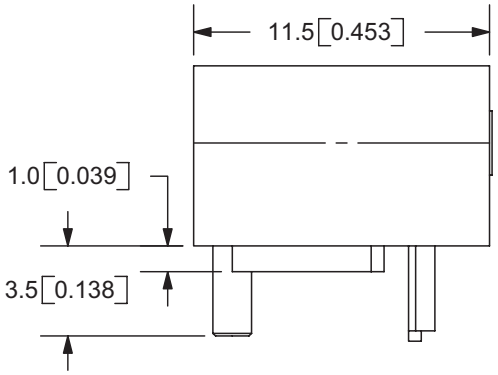

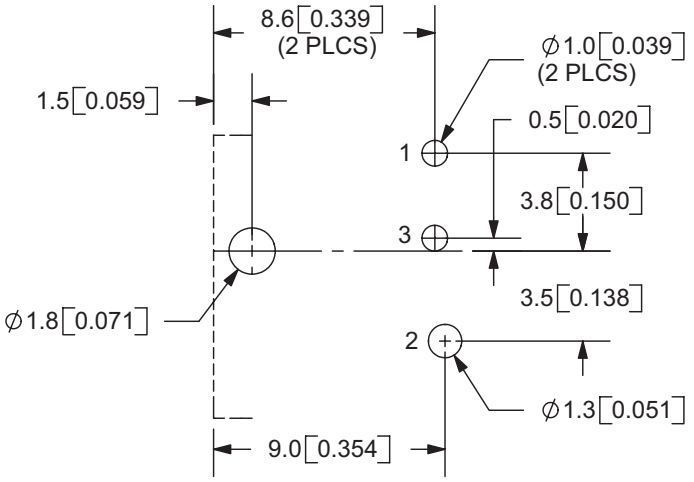

PCB LAYOUT
TOP VIEW

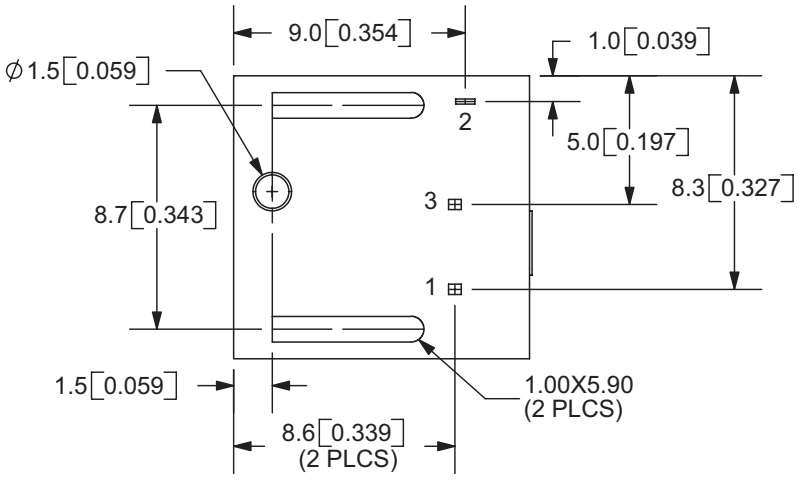

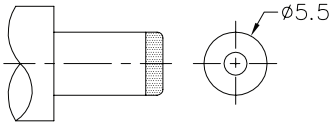

MATING PLUG
Jack Insertion Depth: 6.7 mm

SCHEMATIC	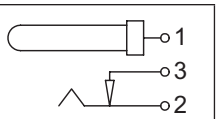
Model	PJ-012B
Center Pin	Ø2.5 mm

Note: 1. All specifications measured at 10~35°C, humidity at 45~85%, under standard atmospheric pressure, unless otherwise noted.

REVISION HISTORY

rev.	description	date
1.0	initial release	05/17/2006
1.01	applied new spec template	11/01/2013
1.02	brand update	06/02/2020
1.03	logo, datasheet style update	08/05/2022
1.04	CUI Devices rebranded to Same Sky	09/12/2024

The revision history provided is for informational purposes only and is believed to be accurate.

same sky

Same Sky offers a one (1) year limited warranty. Complete warranty information is listed on our website.

Same Sky reserves the right to make changes to the product at any time without notice. Information provided by Same Sky is believed to be accurate and reliable. However, no responsibility is assumed by Same Sky for its use, nor for any infringements of patents or other rights of third parties which may result from its use.

Same Sky products are not authorized or warranted for use as critical components in equipment that requires an extremely high level of reliability. A critical component is any component of a life support device or system whose failure to perform can be reasonably expected to cause the failure of the life support device or system, or to affect its safety or effectiveness.

sameskydevices.com