Additional Resources: Product Page | 3D Model

REV.	DESCRIPTION	DATE
A	NEW DRAWING	10/19/2007
B	PCB layout updated	11/9/2010
C	logo, brand update	10/28/2022

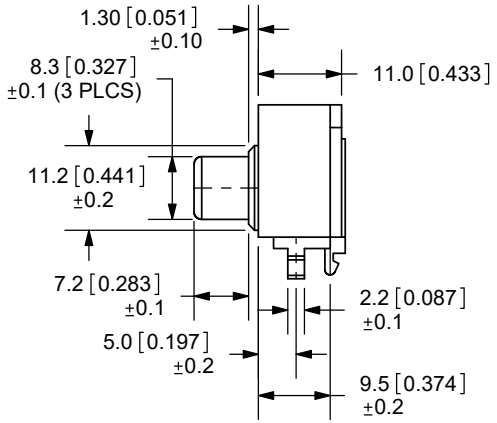

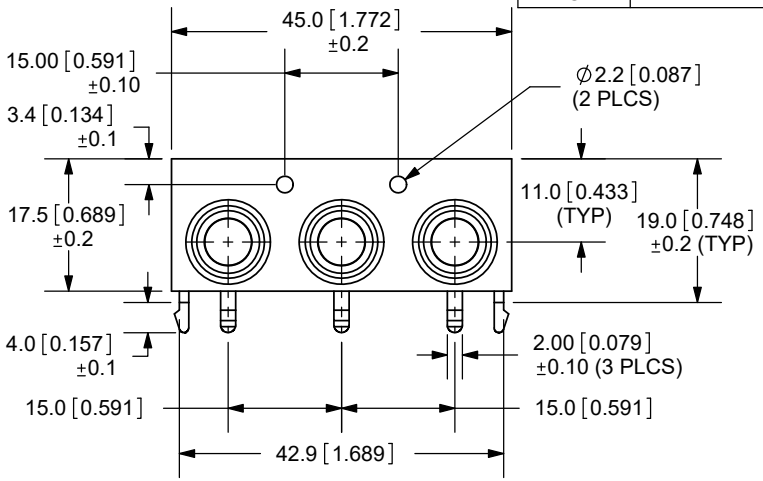

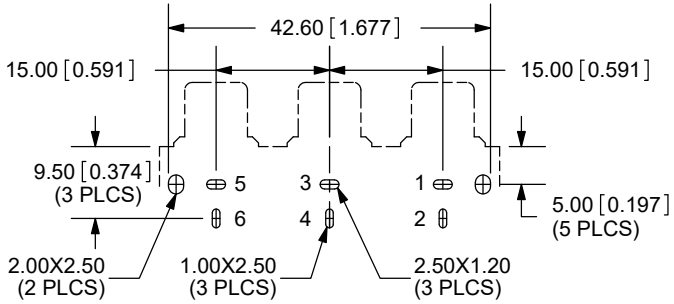

PCB LAYOUT
TOP VIEW

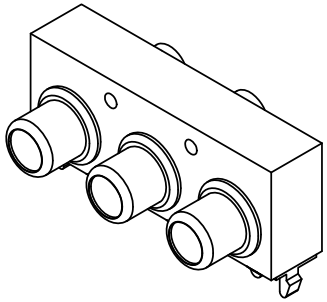

COLOR CHART	
1	Black
2	Red
3	White
4	Yellow
5	Blue
6	Green
7	Orange

SPECIFICATIONS:
CONTACT RESISTANCE: 30m OHMS MAX
INSULATION RESISTANCE: 50M OHMS MIN: 100V DC
VOLTAGE WITHSTAND: 500V AC R.M.S. FOR 1 MINUTE
LIFE: 5,000 CYCLES
OPERATING TEMPERATURE: -20°C ~ 85°C (85% RH MAX)
STORAGE TEMPERATURE: -25°C ~ 85°C (85% RH MAX)

TOLERANCE:
±0.3mm UNLESS
OTHERWISE SPECIFIED

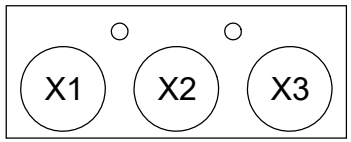

COLOR INDEX			
PART NO.	INPUT X1	INPUT X2	INPUT X3
RCJ-32234	Red Color	White Color	Yellow Color
RCJ-32X1 X2 X3	Color X1	Color X2	Color X3

MODEL NO.	RCJ-32XXX
SCHEMATIC	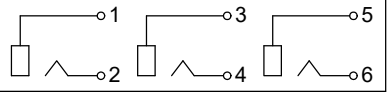

	MATERIAL	PLATING
TERMINAL	Brass	Nickel
PIN	Brass	Tin
BASE	PA66	Black Color
INPUT X1	PA66	see color index
INPUT X2	PA66	see color index
INPUT X3	PA66	see color index

CUI DEVICES
6405 SW Rosewood St, Suite C
Lake Oswego, OR 97035
Phone: 877-323-3576

Website: www.cuidevices.com

TITLE: RCA Jack, 3-Port, Rt Angle, PCB Mount, Horiz.		REV: C
PART NO. RCJ-32XXX	UNITS: MM [INCHES]	
DRAWN BY: RDS	APPROVED BY:	SCALE: 1:1

PC FILE NAME: RCJ-32XXX

COPYRIGHT 2022 BY CUI DEVICES