CUI INC
a bel group

SERIES: DEP1-M | DESCRIPTION: DC-DC CONVERTER

FEATURES

- 1 W isolated output
- compact SMT package
- single and dual unregulated outputs
- 3,000 Vdc isolation voltage
- -40 to 105°C with derating
- certified to UL 62368-1
- continuous short circuit protection

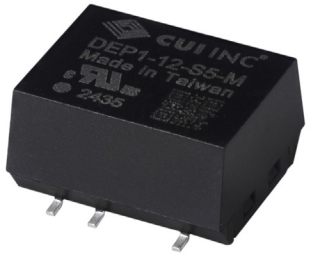

RoHS c UL us

MODEL

MODEL	input voltage typ (Vdc)	input voltage range (Vdc)	output voltage (Vdc)	output current max (mA)	output power max (W)	ripple & noise[1] max (mVp-p)	efficiency[2] typ (%)
DEP1-3-S3-M	3.3	2.97~3.63	3.3	303	1	100	73
DEP1-3-S5-M	3.3	2.97~3.63	5	200	1	100	78.9
DEP1-3-S12-M	3.3	2.97~3.63	12	84	1	100	82.5
DEP1-3-S15-M	3.3	2.97~3.63	15	67	1	100	85.5
DEP1-3-D3-M	3.3	2.97~3.63	±3.3	±152	1	100	77
DEP1-3-D5-M	3.3	2.97~3.63	±5	±100	1	100	79
DEP1-3-D9-M	3.3	2.97~3.63	±9	±56	1	100	79
DEP1-3-D12-M	3.3	2.97~3.63	±12	±42	1	100	79
DEP1-3-D15-M	3.3	2.97~3.63	±15	±34	1	100	79
DEP1-5-S3-M	5	4.5~5.5	3.3	303	1	100	77
DEP1-5-S5-M	5	4.5~5.5	5	200	1	100	77.8
DEP1-5-S9-M	5	4.5~5.5	9	112	1	100	78
DEP1-5-S12-M	5	4.5~5.5	12	84	1	100	78.5
DEP1-5-S15-M	5	4.5~5.5	15	67	1	100	79.4
DEP1-5-D3-M	5	4.5~5.5	±3.3	±152	1	100	77
DEP1-5-D5-M	5	4.5~5.5	±5	±100	1	100	78
DEP1-5-D9-M	5	4.5~5.5	±9	±56	1	100	78
DEP1-5-D12-M	5	4.5~5.5	±12	±42	1	100	79
DEP1-5-D15-M	5	4.5~5.5	±15	±34	1	100	77
DEP1-12-S3-M	12	10.8~13.2	3.3	303	1	100	74
DEP1-12-S5-M	12	10.8~13.2	5	200	1	100	73.5
DEP1-12-S9-M	12	10.8~13.2	9	112	1	100	78.5
DEP1-12-S12-M	12	10.8~13.2	12	84	1	100	80
DEP1-12-S15-M	12	10.8~13.2	15	67	1	100	83
DEP1-12-D3-M	12	10.8~13.2	±3.3	±152	1	100	74
DEP1-12-D5-M	12	10.8~13.2	±5	±100	1	100	75
DEP1-12-D9-M	12	10.8~13.2	±9	±56	1	100	80
DEP1-12-D12-M	12	10.8~13.2	±12	±42	1	100	84
DEP1-12-D15-M	12	10.8~13.2	±15	±34	1	100	80

MODEL

	input voltage		output voltage	output current	output power	ripple & noise[1]	efficiency[2]
	typ (Vdc)	range (Vdc)	(Vdc)	max (mA)	max (W)	max (mVp-p)	typ (%)
DEP1-15-S5-M	15	13.5~16.5	5	200	1	100	74.1
DEP1-15-S12-M	15	13.5~16.5	12	84	1	100	81
DEP1-24-S5-M	24	21.6~26.4	5	200	1	100	73.5
DEP1-24-S12-M	24	21.6~26.4	12	84	1	100	80
DEP1-24-S15-M	24	21.6~26.4	15	67	1	100	81.5
DEP1-24-D3-M	24	21.6~26.4	±3.3	±152	1	100	79
DEP1-24-D5-M	24	21.6~26.4	±5	±100	1	100	74
DEP1-24-D9-M	24	21.6~26.4	±9	±56	1	100	79
DEP1-24-D12-M	24	21.6~26.4	±12	±42	1	100	82
DEP1-24-D15-M	24	21.6~26.4	±15	±34	1	100	82

Notes: 1. At full load, nominal input, 20 MHz bandwidth oscilloscope.
2. The efficiency is test by nominal input and max. full load at 25°C.
3. All specifications measured at Ta=25°C, nominal input voltage, rated output load, and after warm up unless otherwise specified.

PART NUMBER KEY

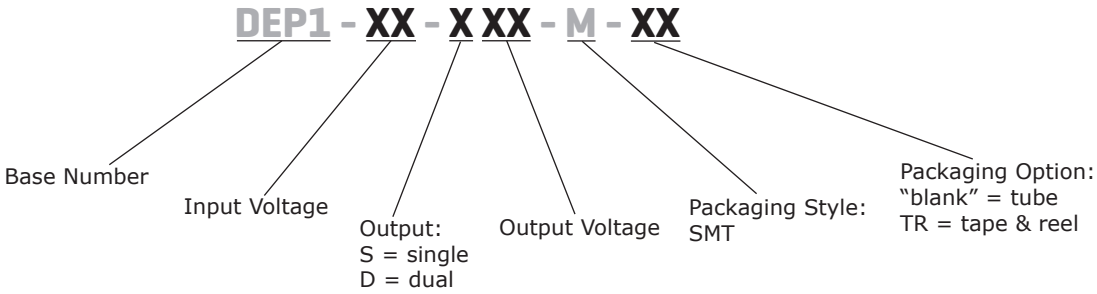

INPUT

parameter	conditions/description	min	typ	max	units
input voltage range		-10		+10	%
filter	capacitance filter				

OUTPUT

parameter	conditions/description	min	typ	max	units
maximum capacitive load	3.3, 5 Vdc output models			470	µF
	9 Vdc output models			220	µF
	12, 15 Vdc output models			100	µF
	±3.3, ±5 Vdc output models			±150	µF
	±9 Vdc output models			±100	µF
	±12, ±15 Vdc output models			±47	µF
voltage accuracy		-5		+5	%
line regulation	measured from low to high line, full load		1.2		%
load regulation	measured from 10~100% load				
	3.3, 5, ±3, ±5 Vdc output models			15	%
	9, 12, 15, ±9, ±12, ±15 Vdc output model			10	%
switching frequency	at Vin nominal, full load	20			kHz

PROTECTIONS

parameter	conditions/description	min	typ	max	units
short circuit protection	continuous				

SAFETY AND COMPLIANCE

parameter	conditions/description		min	typ	max	units
isolation voltage	input to output for 1 minute		3,000			Vdc
isolation capacitance					20	pF
safety approvals	certified to 62368-1: UL					
EMI	EN 55032 Class A/B (see recommended circuit)					
ESD	EN 61000-4-2, Air ±8 kV; Contact ±6 kV, perf. Criteria B					
radiated immunity	EN 61000-4-3, 3 V/m, perf. Criteria A					
fast transient	EN 61000-4-4, ±1 kV, perf. Criteria B					
surge	EN 61000-4-5, ±0.5 kV, perf. Criteria B					
conducted immunity	EN 61000-4-6, 3 Vrms, perf. Criteria A					
magnetic field immunity	EN 61000-4-8, 1 A/m at 50 Hz, perf. Criteria A					
vibration	MIL-STD-202G					
MTBF	at 25°C	single output dual output	2,992,000 21,400,000			hours hours
	at 85°C	single output dual output	955,000 7,800,000			hours hours
RoHS	yes					

ENVIRONMENTAL

parameter	conditions/description	min	typ	max	units
operating temperature	see derating curves	-40		105	°C
storage temperature		-55		125	°C
maximum case temperature				120	°C
operating humidity	non-condensing	-		95	%

MECHANICAL

parameter	conditions/description	min	typ	max	units
dimensions	single output dual output	12.75 (L) x 10.70 (W) x 7.00 (H) 15.24 (L) x 10.70 (W) x 7.00 (H)			mm mm
case material	UL94V-0 black plastic				
weight	single output dual output		1.0 1.2		g g

MECHANICAL DRAWING

Single output
units: mm
tolerance: ±0.25 mm
pin section tolerance: ±0.1 mm

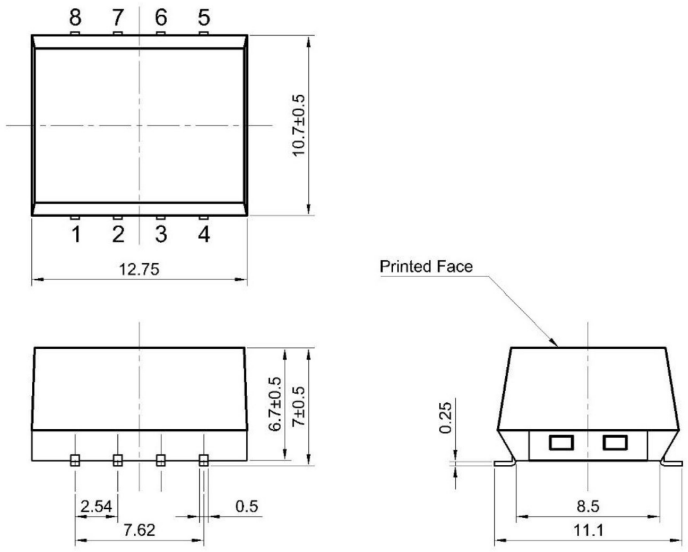

PIN CONNECTIONS	
PIN	Functions
1	-Vin
2	+Vin
3	no pin
4	-Vout
5	+Vout
6	no pin
7	no pin
8	NC

NC = no connection

Dual output
units: mm
tolerance: ±0.25 mm
pin section tolerance: ±0.1 mm

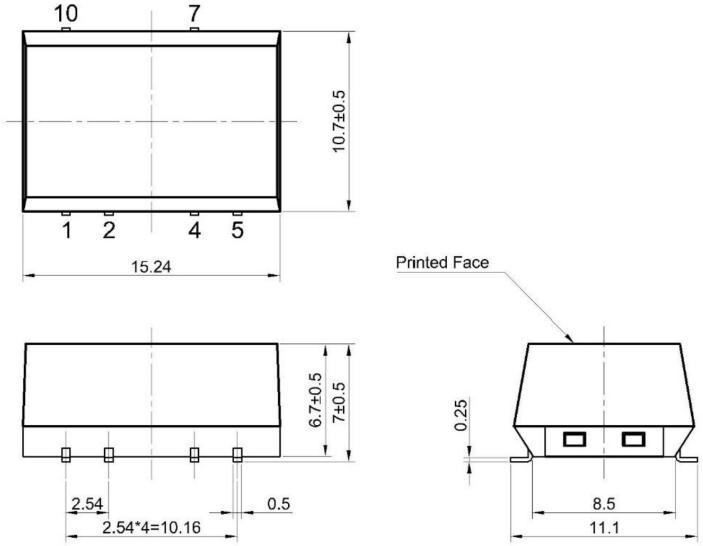

PIN CONNECTIONS	
PIN	Functions
1	-Vin
2	+Vin
4	Com.
5	-Vout
7	+Vout
10	NC

NC = no connection

DERATING CURVE

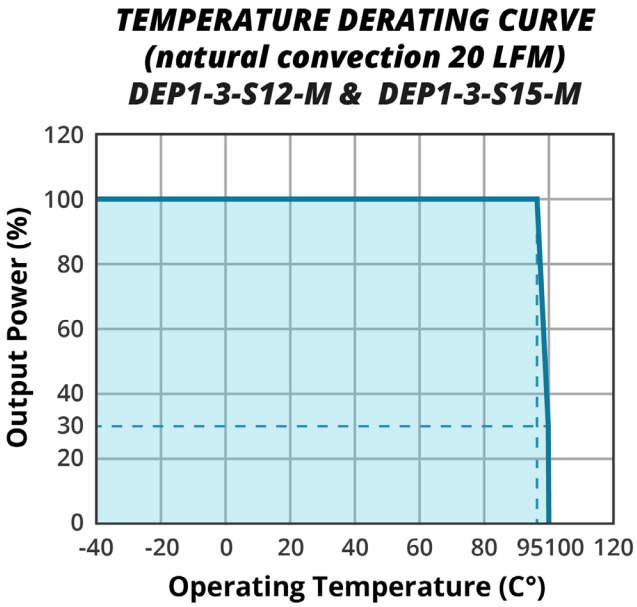

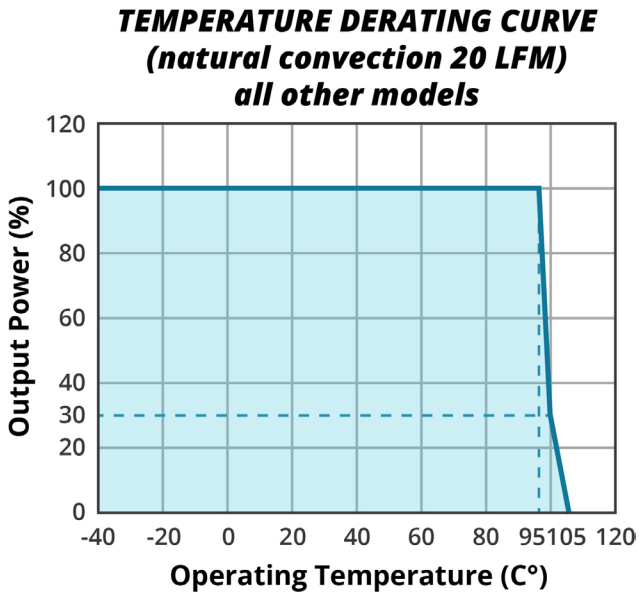

RIPPLE AND NOISE MEASURE METHOD

Figure 1

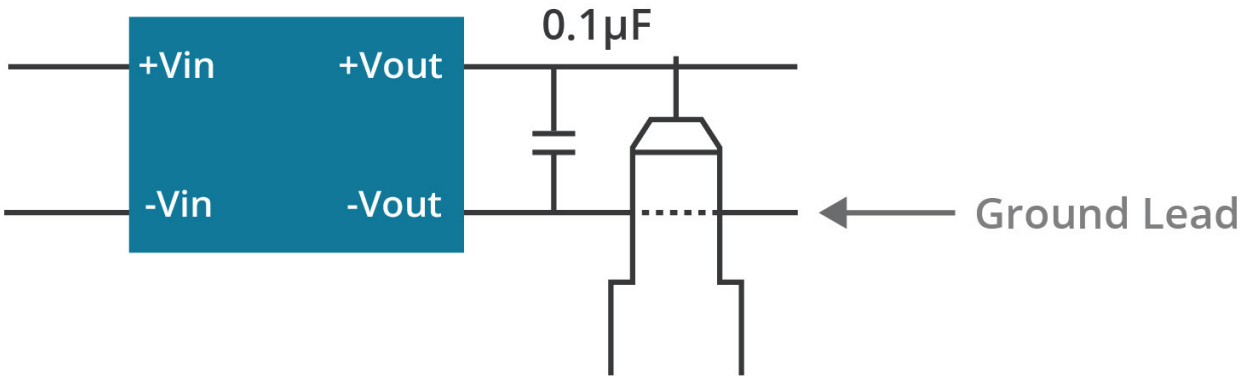

Note: Measured with 20MHz bandwidth and 0.1µF ceramic capacitor.

EMI RECOMMENDED CIRCUIT FOR CLASS A

Figure 2
Single output

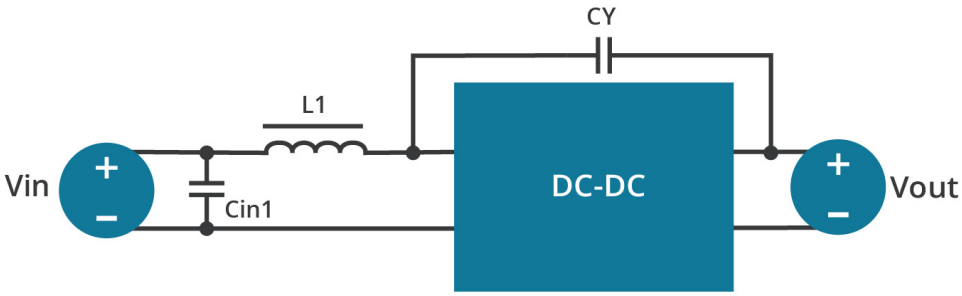

Dual output

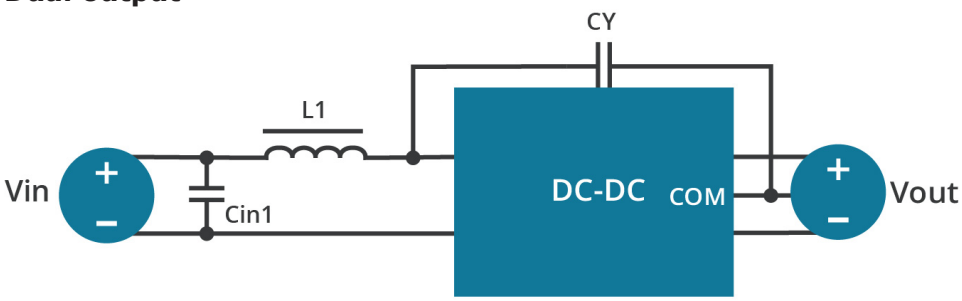

Vin	Inductance/Capacitance	
	(Lin/Cin1)	CY
3.3	22μH/4.7μF	NA
others	22μH/4.7μF	220P

EMI RECOMMENDED CIRCUIT FOR CLASS B

Figure 3
Single output

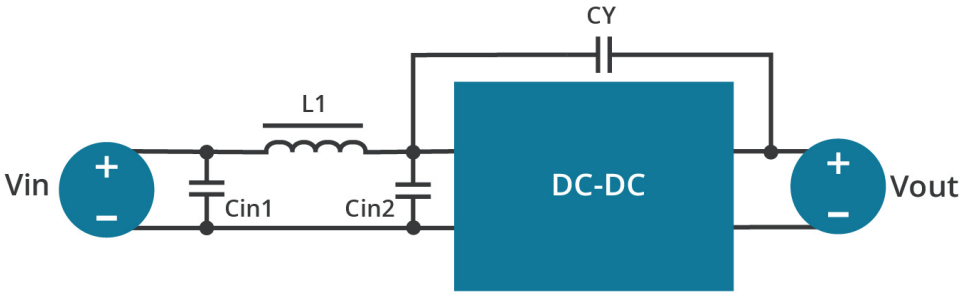

Dual output

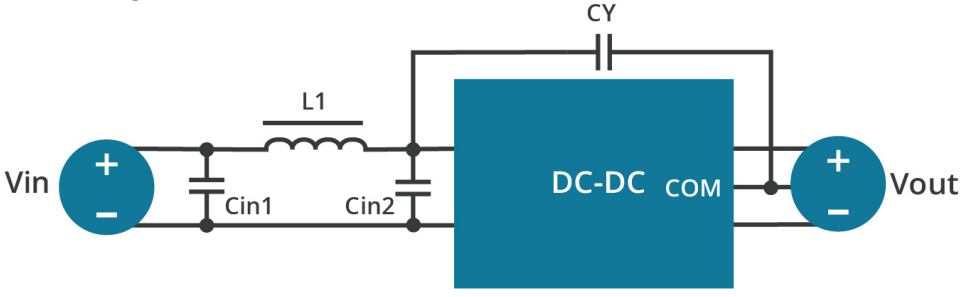

Vin	Inductance/Capacitance	
	(Lin/Cin1/Cin2)	CY
3.3	22μH/4.7μF/4.7μF	NA
others	22μH/4.7μF/4.7μF	220P

REVISION HISTORY

rev.	description	date
1.0	initial release	12/18/2024
1.01	maximum operating temperature updated, EMI filtering added	01/15/2025
1.02	features updated	03/12/2025

The revision history provided is for informational purposes only and is believed to be accurate.

CUI INC
a bel group

Headquarters
15575 SW Sequoia Pkwy #100
Portland, OR 97224
800.275.4899

Fax 503.612.2383
cui.com
techsupport@cui.com

CUI offers a two (2) year limited warranty. Complete warranty information is listed on our website.

CUI reserves the right to make changes to the product at any time without notice. Information provided by CUI is believed to be accurate and reliable. However, no responsibility is assumed by CUI for its use, nor for any infringements of patents or other rights of third parties which may result from its use.

CUI products are not authorized or warranted for use as critical components in equipment that requires an extremely high level of reliability. A critical component is any component of a life support device or system whose failure to perform can be reasonably expected to cause the failure of the life support device or system, or to affect its safety or effectiveness.