CUI INC
a bel group

SERIES: DRM2-S | DESCRIPTION: DC-DC CONVERTER

FEATURES

- 2 W isolated output
- industry standard SIP package
- single and dual unregulated output
- short circuit protection
- 3,000 Vdc isolation voltage
- certified to UL 62368-1
- -40 to 95 °C with derating

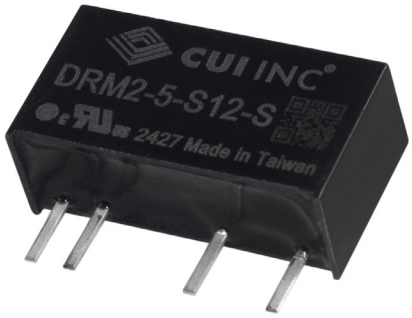

RoHS c UL us

MODEL	input voltage typ (Vdc)	input voltage range (Vdc)	output voltage (Vdc)	output current max (mA)	output power max (W)	ripple & noise[1] max (mVp-p)	efficiency typ (%)
DRM2-5-S3-S	5	4.5~5.5	3.3	606	2	150	75
DRM2-5-S5-S	5	4.5~5.5	5	400	2	120	79
DRM2-5-S9-S	5	4.5~5.5	9	223	2	120	83
DRM2-5-S12-S	5	4.5~5.5	12	167	2	120	83
DRM2-5-S15-S	5	4.5~5.5	15	134	2	120	82
DRM2-5-D3-S	5	4.5~5.5	±3.3	±303	2	150	78
DRM2-5-D5-S	5	4.5~5.5	±5	±200	2	120	81
DRM2-5-D12-S	5	4.5~5.5	±12	±84	2	120	84
DRM2-5-D15-S	5	4.5~5.5	±15	±67	2	120	83
DRM2-12-S3-S	12	10.8~13.2	3.3	606	2	150	78
DRM2-12-S5-S	12	10.8~13.2	5	400	2	120	79
DRM2-12-S9-S	12	10.8~13.2	9	223	2	120	85
DRM2-12-S12-S	12	10.8~13.2	12	167	2	120	85
DRM2-12-S15-S	12	10.8~13.2	15	134	2	120	82
DRM2-12-D3-S	12	10.8~13.2	±3.3	±303	2	150	82
DRM2-12-D5-S	12	10.8~13.2	±5	±200	2	120	81
DRM2-12-D12-S	12	10.8~13.2	±12	±84	2	120	80
DRM2-12-D15-S	12	10.8~13.2	±15	±67	2	120	82
DRM2-24-S3-S	24	21.6~26.4	3.3	606	2	150	80
DRM2-24-S5-S	24	21.6~26.4	5	400	2	120	84
DRM2-24-S9-S	24	21.6~26.4	9	223	2	120	86
DRM2-24-S12-S	24	21.6~26.4	12	167	2	120	86
DRM2-24-S15-S	24	21.6~26.4	15	134	2	120	85
DRM2-24-D3-S	24	21.6~26.4	±3.3	±303	2	150	82
DRM2-24-D5-S	24	21.6~26.4	±5	±200	2	120	83
DRM2-24-D12-S	24	21.6~26.4	±12	±84	2	120	83
DRM2-24-D15-S	24	21.6~26.4	±15	±67	2	120	84

Notes:
1. At full load, nominal input, 20 MHz bandwidth oscilloscope.
2. The efficiency is test by nominal input and max. full load at 25˚C.
3. All specifications measured at Ta=25°C, nominal input voltage, rated output load, and after warm up unless otherwise specified.

PART NUMBER KEY

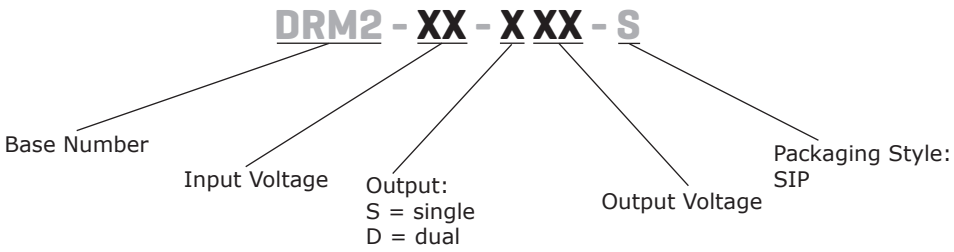

INPUT

parameter	conditions/description	min	typ	max	units
input voltage range		-10		+10	%
filter	capacitance filter				

OUTPUT

parameter	conditions/description	min	typ	max	units
maximum capacitive load[4,5]	3.3, 5 Vdc output models ±3.3, ±5, 9 Vdc output models 12, 15 Vdc output models ±12, ±15 Vdc output models			1,500 680 470 220	µF µF µF µF
voltage accuracy		-5		+5	%
line regulation	measured from low to high line, full load		±1.2		%
load regulation	measured from 10~100% load 3.3 Vdc output models 5 Vdc output models 9, 12, 15 Vdc output model			 20 15 10	 % %
switching frequency	at Vin nominal, full load	20			kHz

Note: 4. The capacitive load is tested by minimum input and constant resistive load.
5. For dual output models, maximum capacitance applies to individual outputs.

PROTECTIONS

parameter	conditions/description	min	typ	max	units
short circuit protection	continuous				

SAFETY AND COMPLIANCE

parameter	conditions/description	min	typ	max	units
isolation voltage	input to output for 1 second	3,000			Vdc
isolation capacitance			80		pF
insulation type	functional				
safety approvals	certified to 62368-1: UL				
EMC	EN 55032/55024[6]				
EMI	EN 55032, Class A/B				
ESD	IEC 61000-4-2, air ±8 kV; contact ±6 kV, perf. Criteria A				
fast transient	IEC 61000-4-4, ±0.5 kV, perf. Criteria A				
surge	IEC 61000-4-5, ±0.5 kV, perf. Criteria A				
conducted immunity	IEC 61000-4-6, 3 Vrms, perf. Criteria A				
vibration	MIL-STD-202G				
MTBF	at 25°C at 85°C	18,300,000 8,070,000			hours hours
RoHS	yes				

Note: 6. Refer to Figures 2 and 3 for recommended EMC circuit.

ENVIRONMENTAL

parameter	conditions/description	min	typ	max	units
operating temperature	see derating curve	-40		95	°C
storage temperature		-55		125	°C
maximum case temperature				105	°C
operating humidity	non-condensing	5		95	%

MECHANICAL

parameter	conditions/description	min	typ	max	units
dimensions	19.65 x 7.05 x 10.20				mm
case material	UL94V-0 black plastic				
potting material	epoxy (UL94V-0)				
weight			2.8		g

MECHANICAL DRAWING

units: mm
tolerance: ±0.25 mm

PIN CONNECTIONS		
PIN	Single	Dual
1	+Vin	+Vin
2	-Vin	-Vin
5	-Vout	-Vout
6	no pin	Com
7	+Vout	+Vout

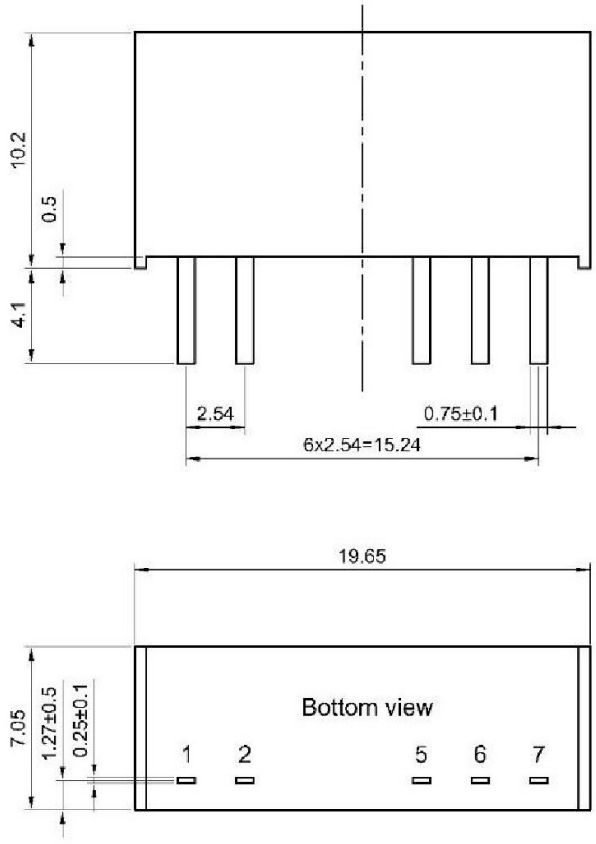

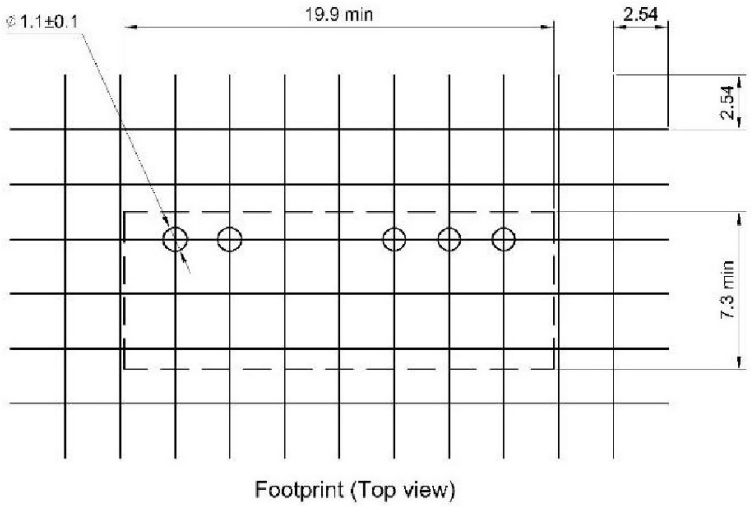

Footprint (Top view)

DERATING CURVE

TEMPERATURE DERATING CURVE (natural convection)

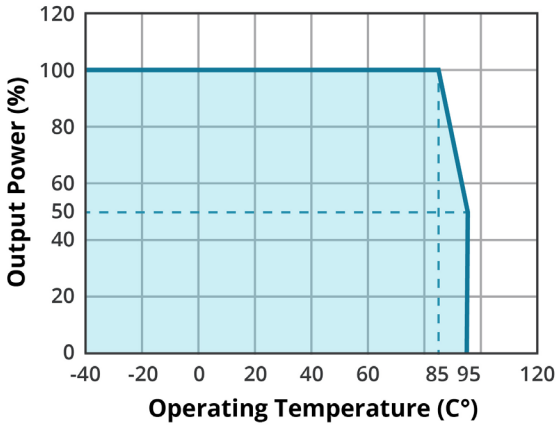

OUTPUT REGULATION CURVE (3.3 Vdc output models)

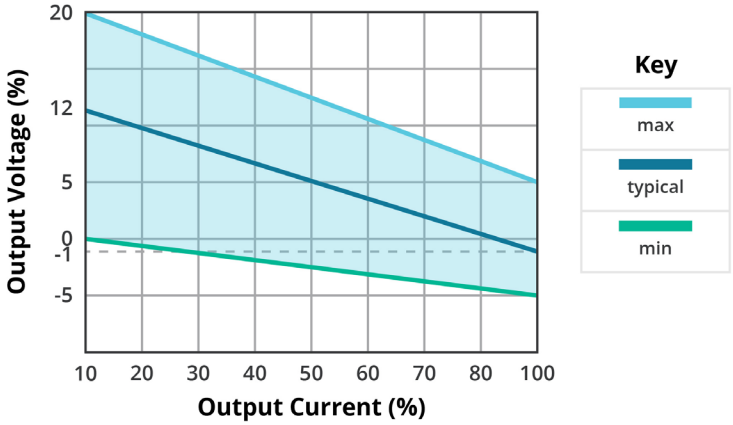

OUTPUT REGULATION CURVE (5 Vdc output models)

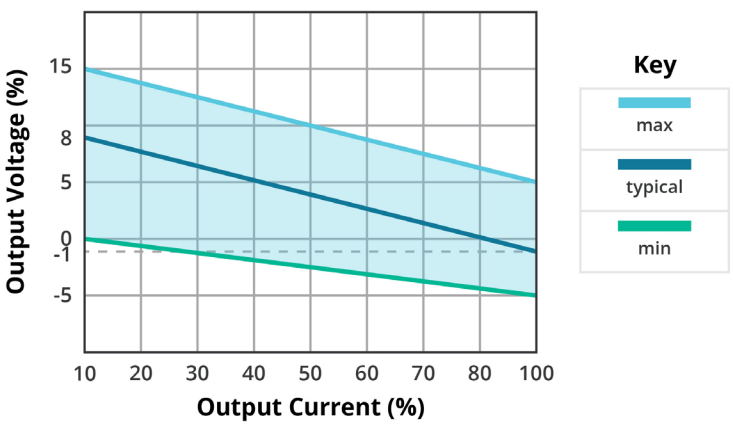

OUTPUT REGULATION CURVE (9 Vdc output models)

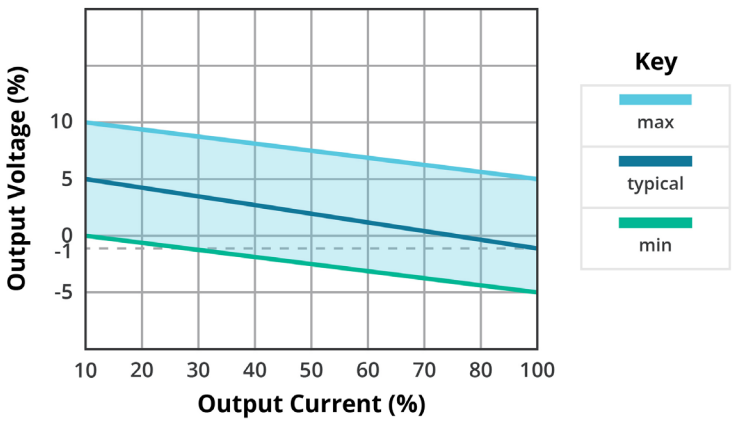

OUTPUT REGULATION CURVE (12,15 Vdc output models)

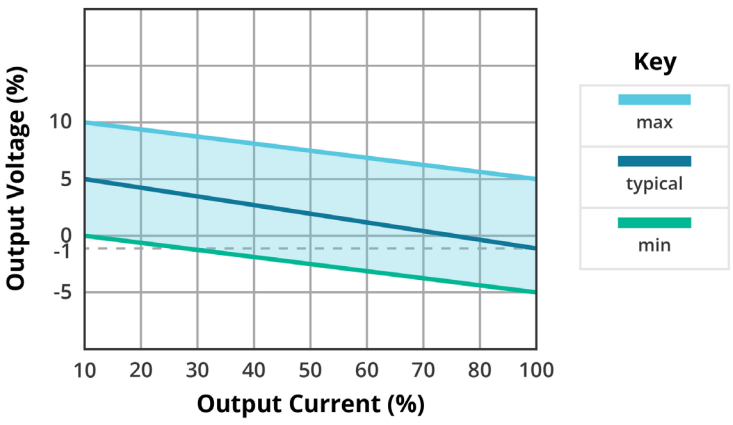

RIPPLE AND NOISE MEASURE METHOD

Figure 1

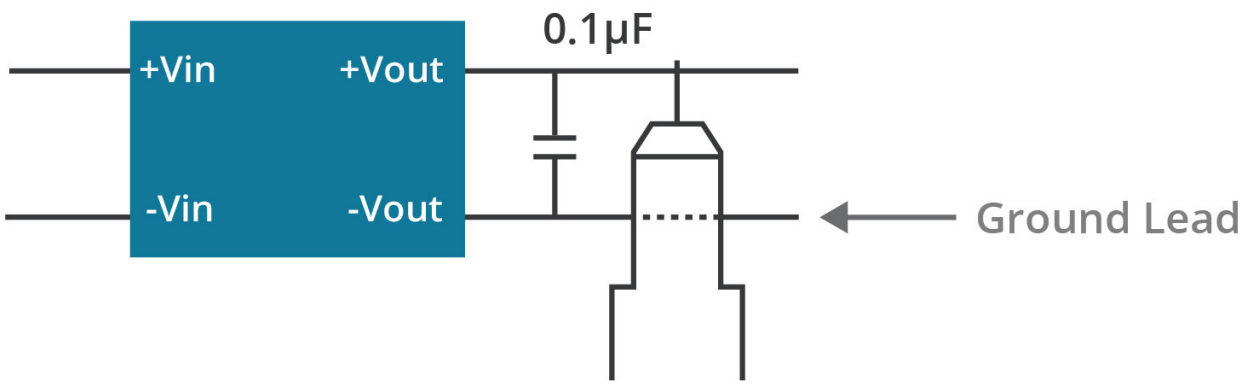

Note: Measured with 20MHz bandwidth and 0.1µF ceramic capacitor.

EMI RECOMMENDED CIRCUIT FOR EN 55032 CLASS A/B

Figure 2
Single output

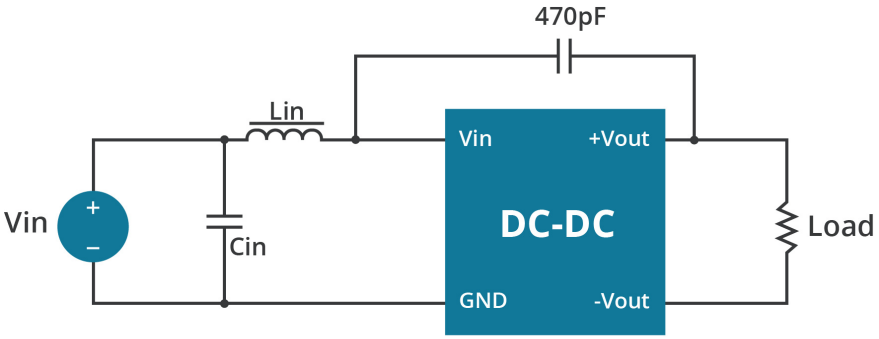

Table 1
Single output

Recommended EMI Filter Values				
Vin	Class A		Class B	
	Lin	Cin	Lin	Cin
5	- µH	- µF	- µH	- µF
12	- µH	- µF	- µH	- µF
24	- µH	- µF	- µH	- µF

Figure 3
Dual output

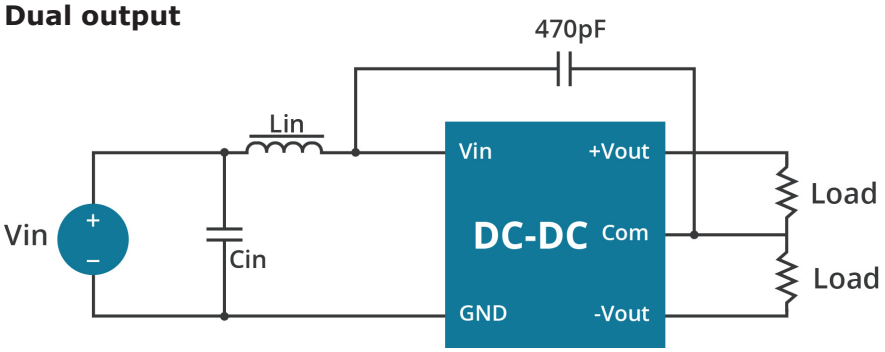

Table 2
Dual output

Recommended EMI Filter Values				
Vin	Class A		Class B	
	Lin	Cin	Lin	Cin
5	- µH	- µF	- µH	- µF
12	- µH	- µF	- µH	- µF
24	- µH	- µF	- µH	- µF

REVISION HISTORY

rev.	description	date
1.0	initial release	10/04/2024
1.01	company address updated	11/05/2024

The revision history provided is for informational purposes only and is believed to be accurate.

CUI INC
a bel group

Headquarters
15575 SW Sequoia Pkwy #100
Portland, OR 97224
800.275.4899
Fax 503.612.2383
cui.com
techsupport@cui.com

CUI offers a two (2) year limited warranty. Complete warranty information is listed on our website.

CUI reserves the right to make changes to the product at any time without notice. Information provided by CUI is believed to be accurate and reliable. However, no responsibility is assumed by CUI for its use, nor for any infringements of patents or other rights of third parties which may result from its use.

CUI products are not authorized or warranted for use as critical components in equipment that requires an extremely high level of reliability. A critical component is any component of a life support device or system whose failure to perform can be reasonably expected to cause the failure of the life support device or system, or to affect its safety or effectiveness.