CUI INC
a bel group

SERIES: DRQ10-S | DESCRIPTION: DC-DC CONVERTER

FEATURES

- up to 10 W isolated output
- 4:1 input range (9~36 and 18~75 Vdc)
- single and dual regulated outputs
- 3,000 Vdc isolation
- remote on/off control
- -40 ~ 105°C temperature range with derating
- continuous short circuit and input under voltage protection



RoHS CE UKCA

MODEL

MODEL	input voltage		output voltage	output current		output power	ripple & noise[1]	efficiency[2]
	typ (Vdc)	range (Vdc)	(Vdc)	min (A)	max (A)	max (W)	max (mVp-p)	typ (%)
DRQ10-24-S3-S	24	9~36	3.3	0	2.0	6.6	100	81.5
DRQ10-24-S5-S	24	9~36	5	0	2.0	10.0	100	85.0
DRQ10-24-S12-S	24	9~36	12	0	0.833	10.0	120	89.0
DRQ10-24-S15-S	24	9~36	15	0	0.666	10.0	150	89.5
DRQ10-24-D5-S	24	9~36	±5	0	±1.0	10.0	100	85.0
DRQ10-24-D12-S	24	9~36	±12	0	±0.417	10.0	120	89.0
DRQ10-24-D15-S	24	9~36	±15	0	±0.333	10.0	150	89.0
DRQ10-48-S3-S	48	18~75	3.3	0	2.0	6.6	100	81.0
DRQ10-48-S5-S	48	18~75	5	0	2.0	10.0	100	85.0
DRQ10-48-S12-S	48	18~75	12	0	0.833	10.0	120	88.0
DRQ10-48-S15-S	48	18~75	15	0	0.666	10.0	150	88.0
DRQ10-48-D5-S	48	18~75	±5	0	±1.0	10.0	100	85.0
DRQ10-48-D12-S	48	18~75	±12	0	±0.417	10.0	120	88.0
DRQ10-48-D15-S	48	18~75	±15	0	±0.333	10.0	150	88.0

Notes: 1. At full load, nominal input, 20 MHz bandwidth oscilloscope, with 1 µF ceramic capacitor on the output.
2. At nominal input voltage.
2. All specifications are measured at Ta=25°C, nominal input voltage, and rated output load unless otherwise specified.

PART NUMBER KEY

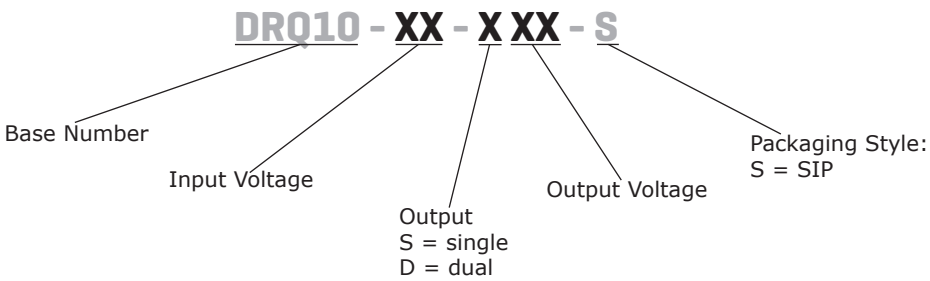

INPUT

parameter	conditions/description	min	typ	max	units
operating input voltage	24 Vdc input models 48 Vdc input models	9 18	24 48	36 75	Vdc Vdc
surge voltage	for maximum of 100 ms 24 Vdc input models 48 Vdc input models			 50 100	 Vdc Vdc
current (no load/full load)	at full load 24 Vdc input model, 3.3 Vdc output voltage model 24 Vdc input model, 5 Vdc, ±5 Vdc output voltage model 24 Vdc input model, 12 Vdc output model 24 Vdc input model, 15 Vdc outupt model 24 Vdc input model, ±12, ±15 Vdc output model 48 Vdc input model, 3.3 Vdc output model 48 Vdc input model, 5, ±5 Vdc output model 48 Vdc input model, 12 Vdc output model 48 Vdc input model, 15, ±12, ±15 Vdc output model			 6/336 6/490 6/473 6/468 7/468 6/168 6/245 6/237 6/234	 mA mA mA mA mA mA mA mA mA
remote on/off	module on open or high impendance module off module off input idle current	 2 -		 4 2.5	 mA mA
filter	capacitance filter				

OUTPUT

parameter	conditions/description	min	typ	max	units
maximum capacitive load	3.3, 5 Vdc output models 12 Vdc output models 15 Vdc output models ±5 Vdc output models ±12 Vdc output models ±15 Vdc output models			2,000 833 666 1,000 417 333	µF µF µF µF µF µF
voltage accuracy				±1	%
voltage balance (dual)				±1	%
line regulation	from high line to low line			±0.2	%
load regulation	from full load to no load			±1	%
voltage balance	dual output models			±1.5	%
cross regulation (dual)	assymetrical load 25%/100%			±5	%
current limit			180		%
start-up time			5		ms
switching frequency			530		kHz
temperature coefficient				±0.02	%/°C

PROTECTIONS

parameter	conditions/description	min	typ	max	units
short circuit protection	continuous, auto recovery				

SAFETY AND COMPLIANCE

parameter	conditions/description	min	typ	max	units
isolation voltage	input to output input to output	3,000 2,000			Vdc Vac
isolation resistance	input to output	1,000			MΩ
safety approvals	certified to 62368-1: EN				
EMI/EMC	EN 55032 Class B (with external filter)				
ESD	EN 61000-4-2 Level 2: Air ±8 kV, Contact ±4 kV, perf. Criteria A				
radiated immunity	EN 61000-4-3 Level 2: 80 ~1000 MHz, 3 V/m, perf. Criteria A				

SAFETY AND COMPLIANCE (CONTINUED)

parameter	conditions/description	min	typ	max	units
PFMF	EN 61000-4-8 Level 2: 50 or 60 Hz, 3 A/m (rms), perf. Criteria A				
MTBF	as per MIL-HDBK-217F, GB, at 25°C, full load		1,930		khours
RoHS	yes				

ENVIRONMENTAL

parameter	conditions/description	min	typ	max	units
operating temperature	see derating curves	-40		105	°C
storage temperature		-55		125	°C
operating humidity	non-condensing			95	%

SOLDERABILITY

parameter	conditions/description	min	typ	max	units
wave soldering	see wave soldering profile			260	°C

WAVE SOLDERING PROFILE

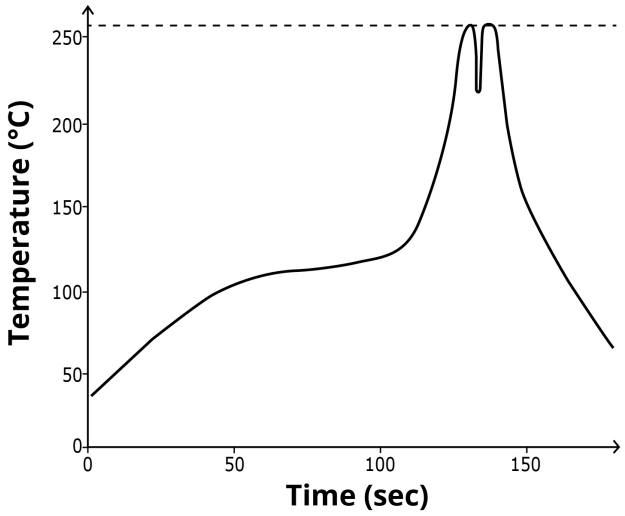

Notes:
1. Soldering materials: Sn/Cu/Ni
2. Ramp up rate during preheat: 1.4°C/s (from 50°C to 100°C)
3. Soaking temperature: 0.5°C/s (from 100°C to 130°C), 60±20 seconds
4. Peak temperature: 260°C, above 250°C for 3~6 seconds
5. Ramp down rate during cooling: -10°C/s (from 260°C to 150°C)

MECHANICAL

parameter	conditions/description	min	typ	max	units
dimensions	0.87 x 0.37 x 0.47 [22.0 x 9.5 x 12.0 mm]				inches
case material	non-conductive black plastic				
weight			4.9		g
cooling	natural convection				

MECHANICAL DRAWING

units: inches [mm]
tolerance: x.xx = ±0.02 [±0.5]
pin diameter tolerance: ±0.002[±0.05]

PIN CONNECTIONS		
PIN	Function	
	Single	Dual
1	-Vin	-Vin
2	+Vin	+Vin
3	on/off	on/off
6	+Vout	+Vout
7	-Vout	Common
8	NC	-Vout

Note: NC = no connection

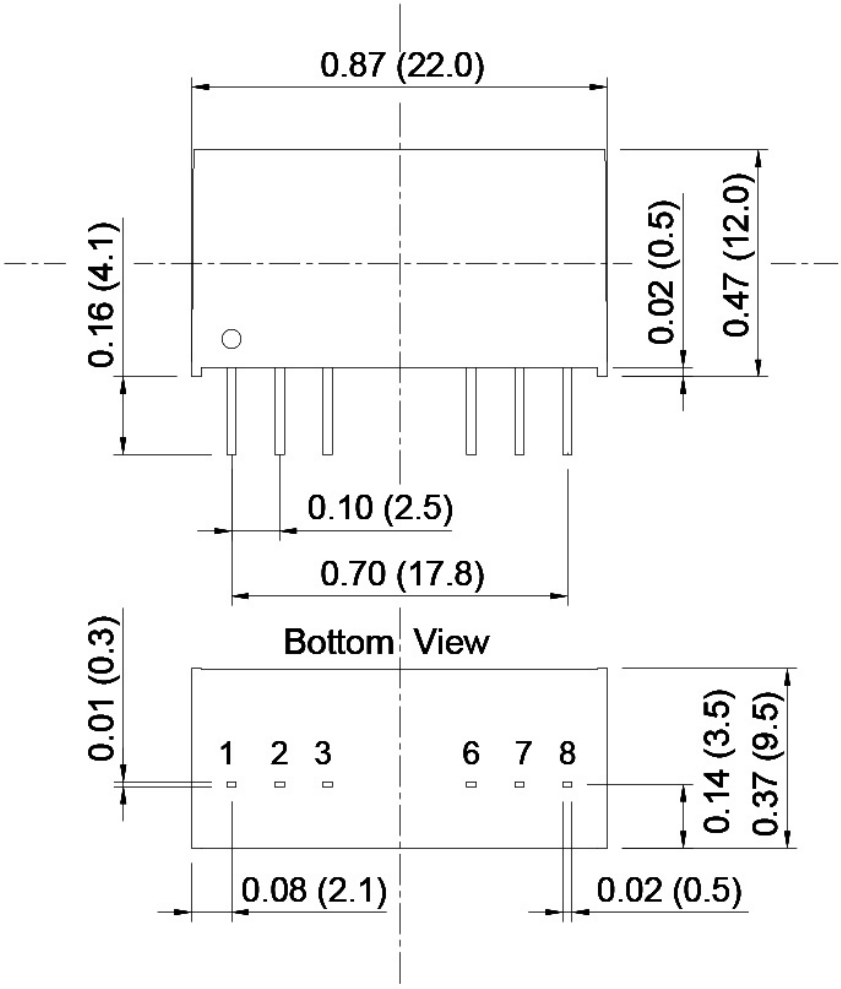

DERATING CURVES

TEMPERATURE DERATING CURVE (3.3 & 5 Vdc output models)

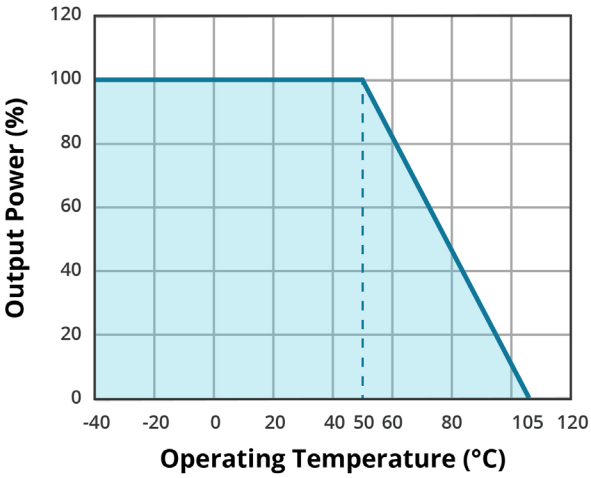

TEMPERATURE DERATING CURVE (12 & 15 Vdc output models)

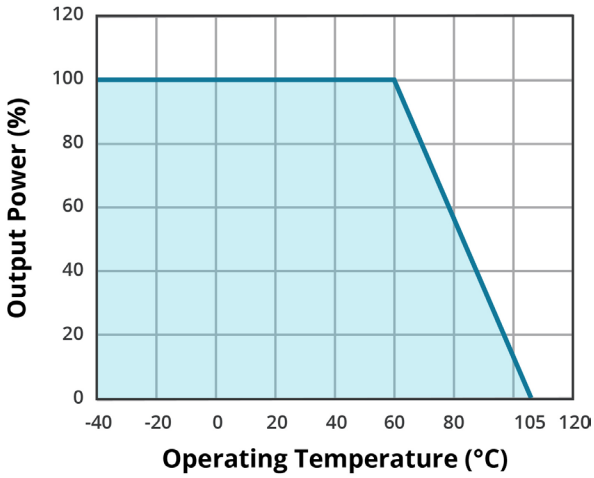

INPUT VOLTAGE DERATING CURVE (3.3, 5 & ±5 Vdc output models)

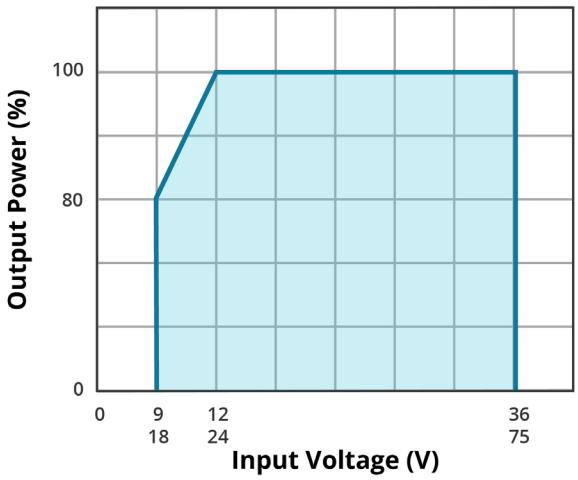

EFFICIENCY CURVES

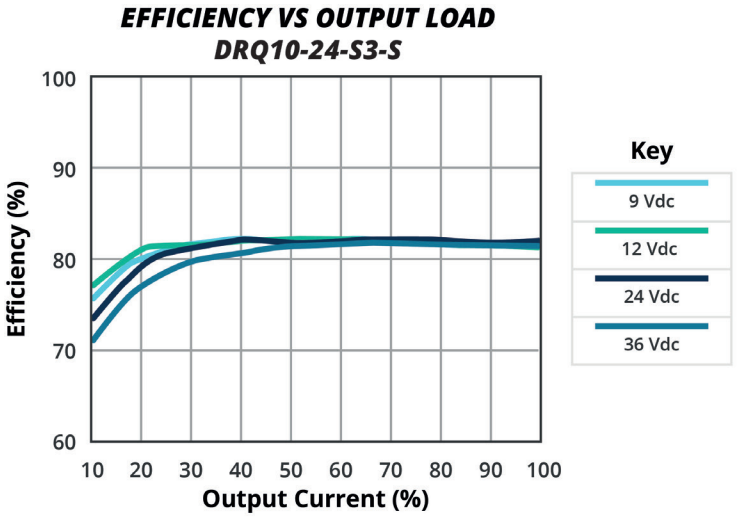

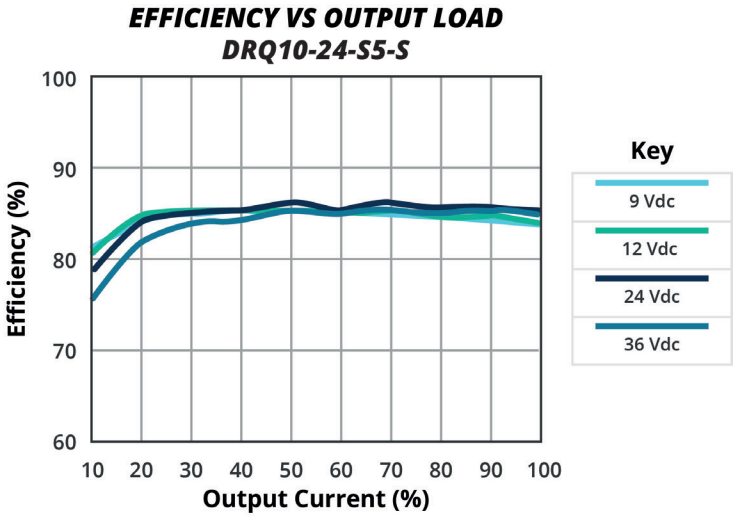

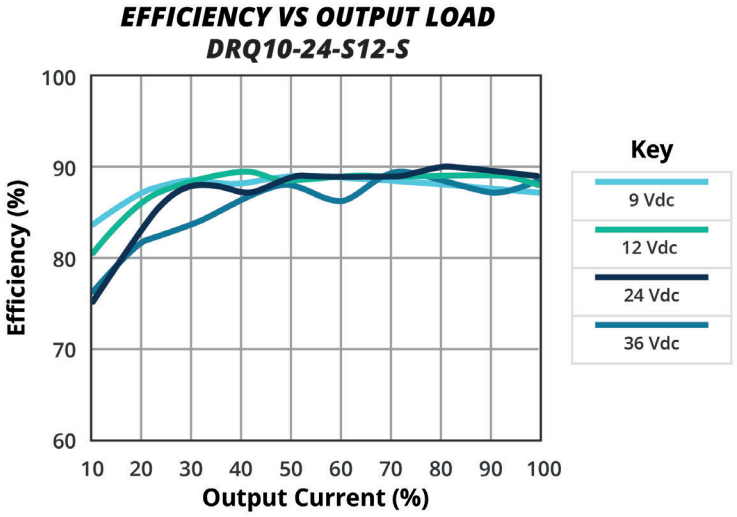

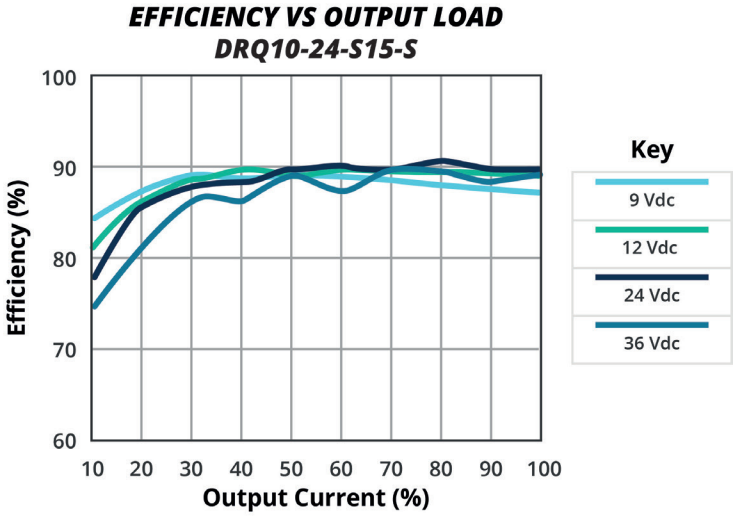

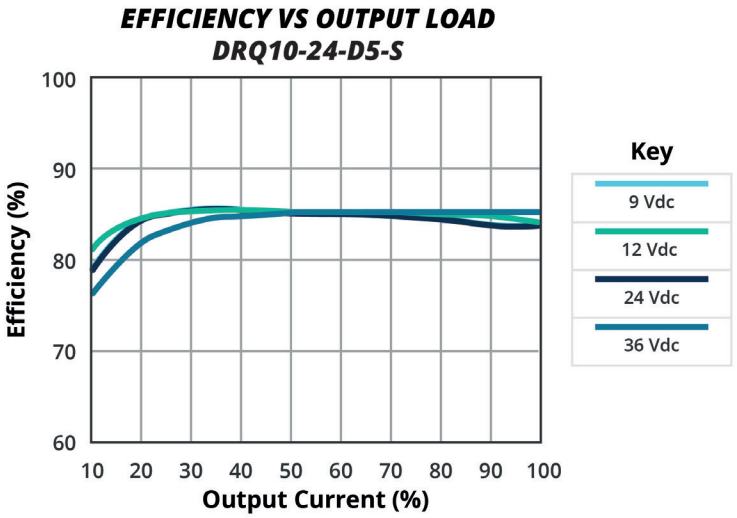

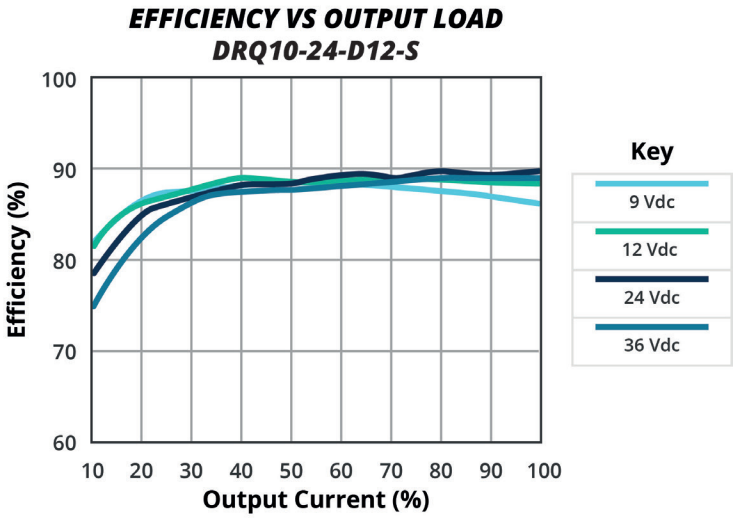

EFFICIENCY CURVES (CONTINUED)

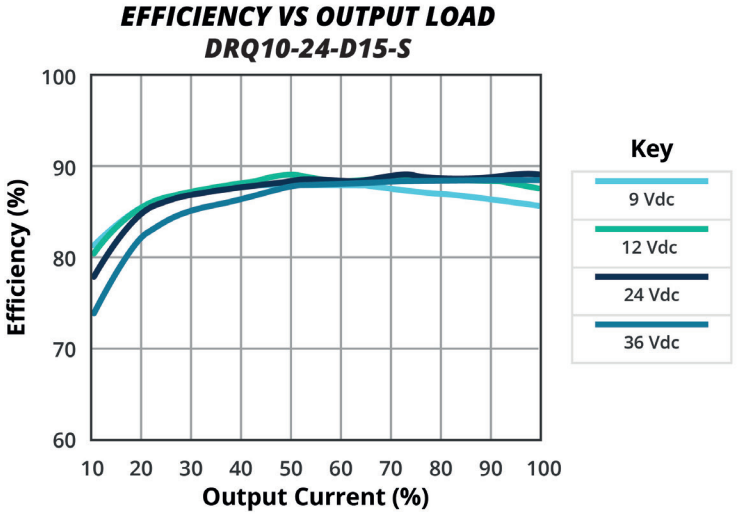

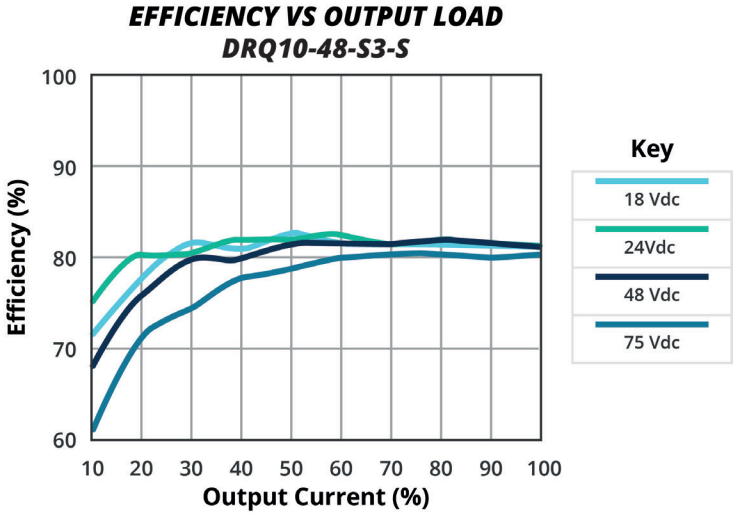

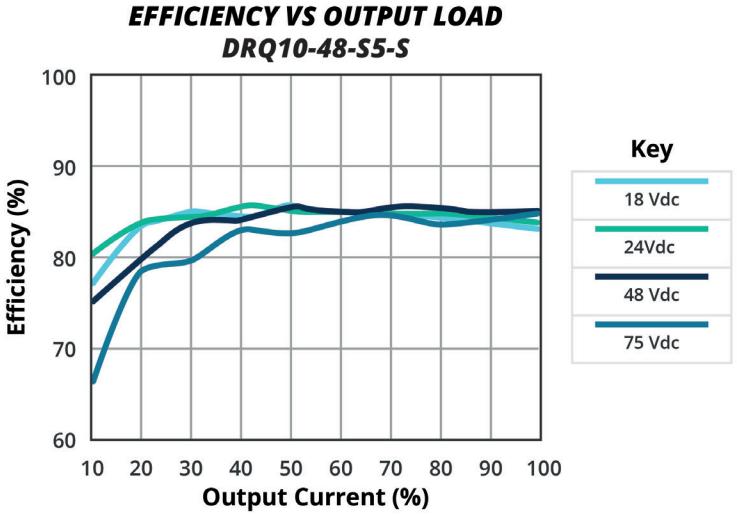

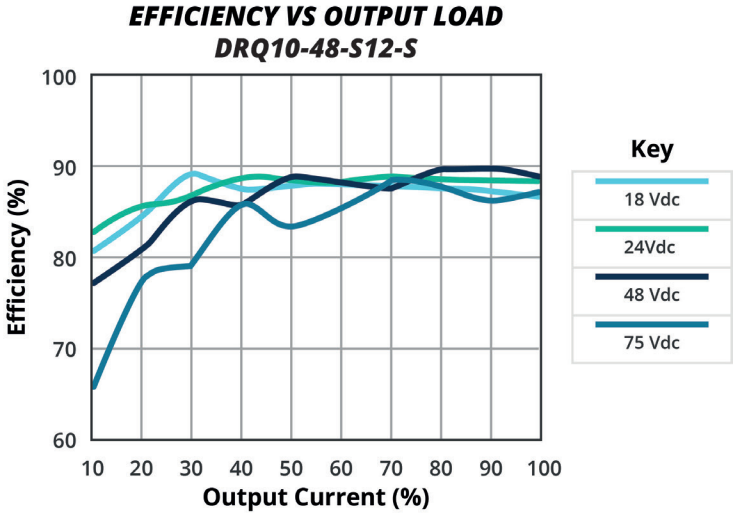

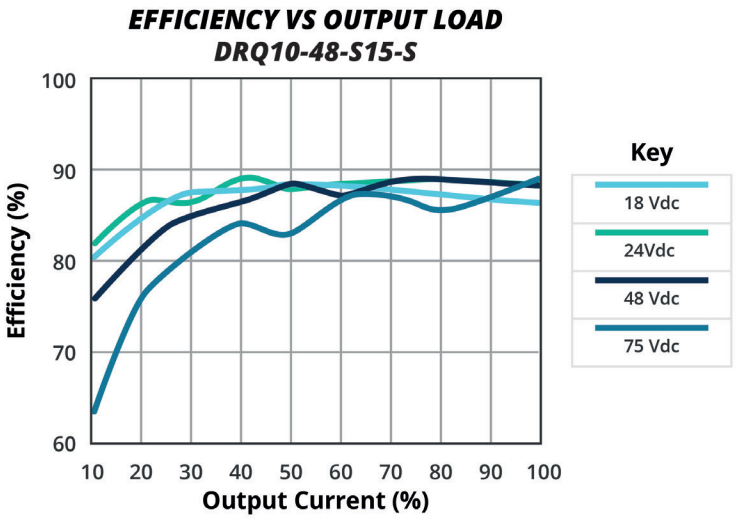

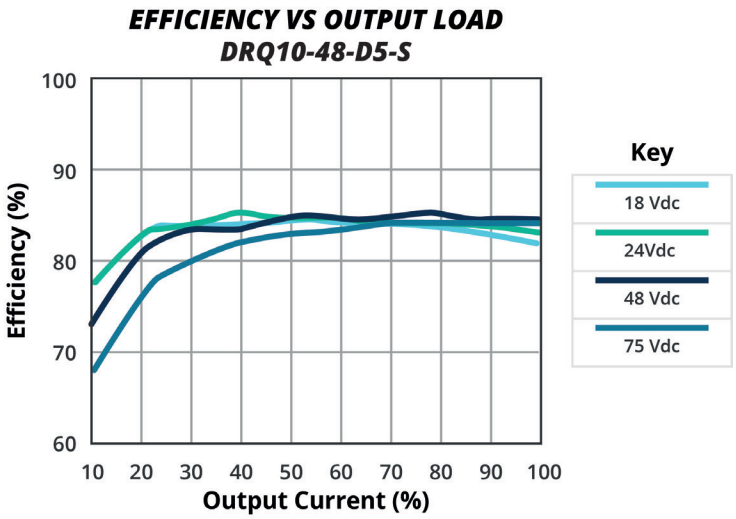

EFFICIENCY CURVES (CONTINUED)

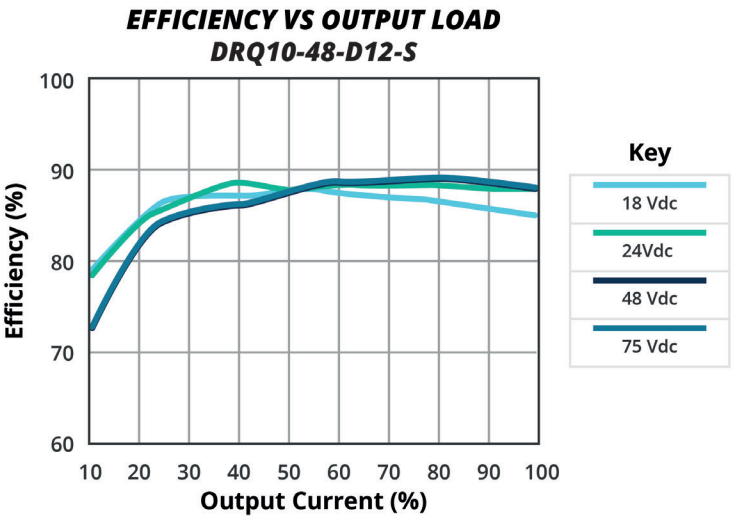

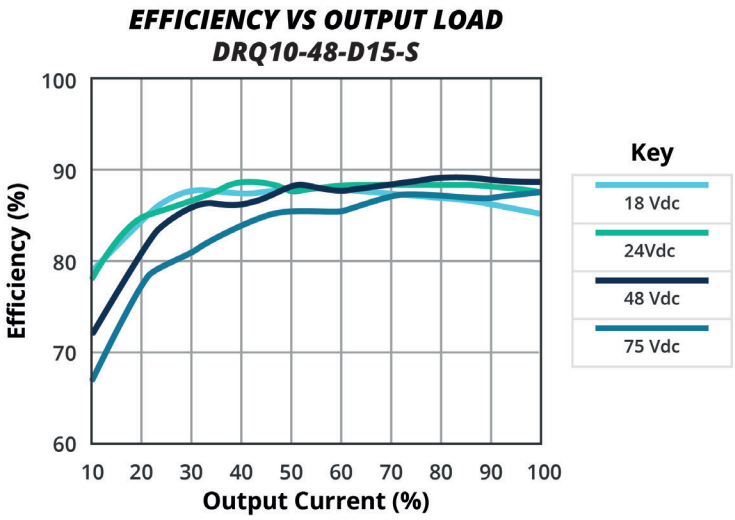

TEST CONFIGURATIONS

The converters must be connected to low AC source impedance. To avoid problems with loop stability source inductance should be low. Also, the input capacitors (Cin) should be placed close to the converter input pins to de-couple distribution inductance. However, the external input capacitors are chosen for suitable ripple handling capability. Low ESR capacitors are good choice. Circuit as shown in figure 3 represents typical measurement methodsfor reflected ripple current. C1 and L1 simulate a typical DC source impedance. The input reflected-ripple current is measured by current probe to oscilloscope with a simulated source Inductance (L1).

Figure 1

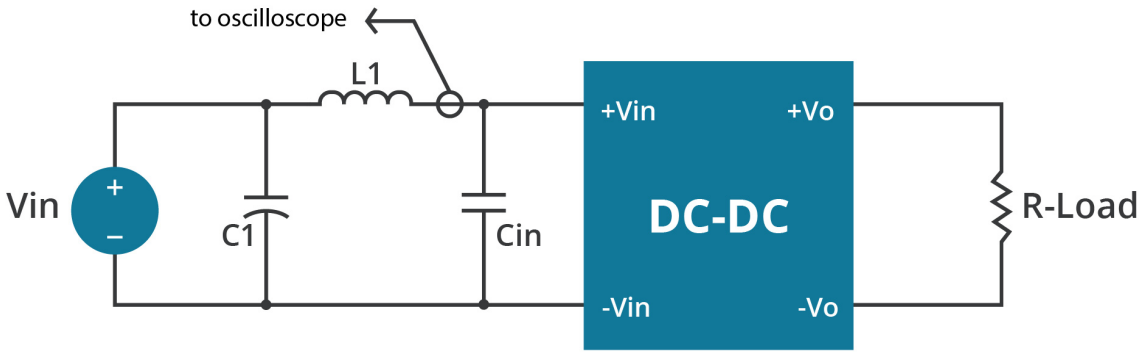

Table 1

L1	12 µH
C1	-
Cin	47 µF ESR < 0.7 Ω at 100 kHz

RIPPLE AND NOISE MEASUREMENT

The test set-up for noise and ripple measurements is shown in Figure 2 and 3. A coaxial cable was used to prevent impedance mismatch reflections disturbing the noise readings at higher frequencies. Measurements are taken with output appropriately loaded and all ripple/noise specifications are from 5Hz to 20MHz Band Width.

Figure 2
Using BNC to measure output ripple and noise

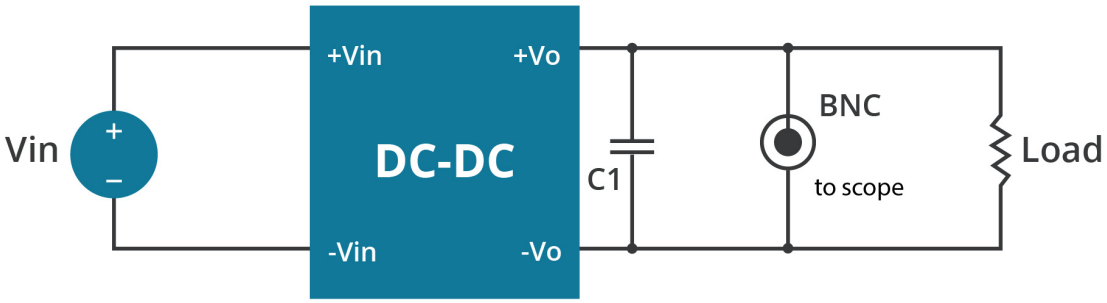

Note: C1: 1µF ceramic capacitor.

Figure 3
Using Probe to Measure Output Ripple and Noise

Single models

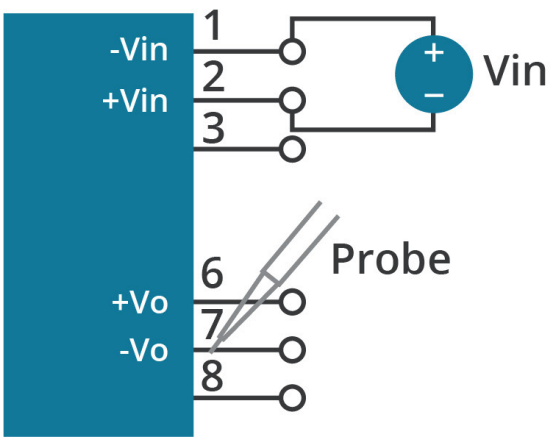

Dual models

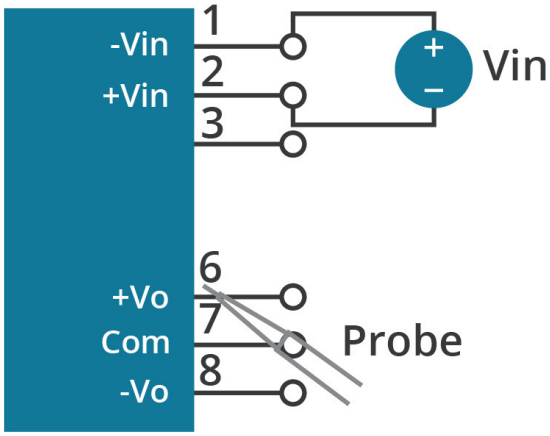

EMC RECOMMENDED CIRCUIT

The DRQ10-S series converters don't have an internal fuse. However, to achieve maximum safety and system protection, always use an input line fuse. We recommended a fast acting fuse 3A for 24Vin models and 1.5A for 48Vin modules. Figure 4 circuit is recommended by a Transient Voltage Suppressor diode across the input terminal to protect the unit against surge or spike voltage and input reverse voltage.

Figure 4
Input protection

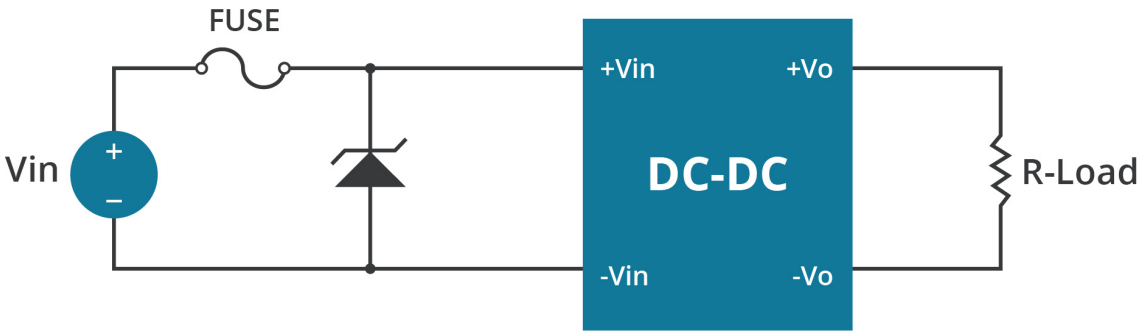

Figure 5
Connection circuit for conducted EMI testing

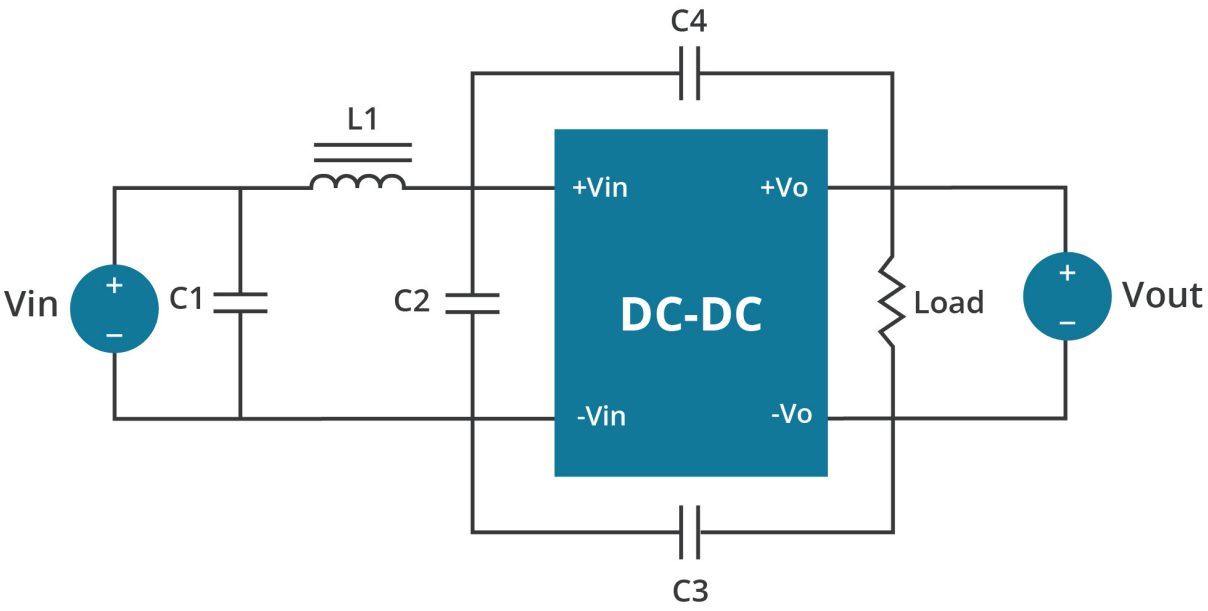

EMI Test standard: EN 55032 Class A/B Conducted Emission
Test Condition: Input Voltage: Nominal,
Output Load: Full Load

REVISION HISTORY

rev.	description	date
1.0	initial release	01/23/2025

The revision history provided is for informational purposes only and is believed to be accurate.

CUI INC
a bel group

Headquarters
15575 SW Sequoia Pkwy #100
Portland, OR 97224
800.275.4899

Fax 503.612.2383
cui.com
techsupport@cui.com

CUI offers a two (2) year limited warranty. Complete warranty information is listed on our website.

CUI reserves the right to make changes to the product at any time without notice. Information provided by CUI is believed to be accurate and reliable. However, no responsibility is assumed by CUI for its use, nor for any infringements of patents or other rights of third parties which may result from its use.

CUI products are not authorized or warranted for use as critical components in equipment that requires an extremely high level of reliability. A critical component is any component of a life support device or system whose failure to perform can be reasonably expected to cause the failure of the life support device or system, or to affect its safety or effectiveness.