CUI INC
a bel group

SERIES: P78B-1000 | DESCRIPTION: DC-DC CONVERTER

FEATURES

- 1A current output
- pin compatible with LM78XX linear regulators
- -40 to +90°C operating temperature
- input voltage range up to 4.75~36 Vdc
- continuous short circuit protection
- compact SIP3 package
- low ripple and noise
- designed to meet EN/IEC 62368-1

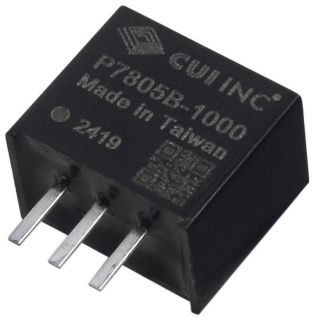

RoHS

MODEL

MODEL	input voltage typ (Vdc)	input voltage range (Vdc)	output voltage (Vdc)	output current max (mA)	output power max (W)	ripple & noise max (mVp-p)	efficiency[3] typ (%)
P7802B-1000	12	4.75~26	1.8	1000	1.8	50[1]	84
P7803B-1000	24	4.75~36	3.3	1000	3.3	50	89
P7805B-1000	24	6.5~36	5.0	1000	5.0	50	92
P7806B-1000	24	8~36	6.5	1000	6.5	75[2]	93.5
P7809B-1000	24	11~36	9.0	1000	9.0	100	93.5
P7812B-1000	24	15~36	12.0	1000	12.0	100	94
P7815B-1000	24	18~36	15.0	1000	15.0	100	94.5

Notes:
1. If you use 26V input and the loading is less 5%, the ripple and noise will be 100mVp-p maximum.
2. With a 4.7μF/50V X7R MLCC, the ripple and noise will be 50mVp-p maximum.
3. At min Vin, full load @25°C, and ±2% tolerance
4. All specifications measured at: Ta=25°C, nominal input voltage, rated output load, and after warm up unless otherwise specified.

PART NUMBER KEY

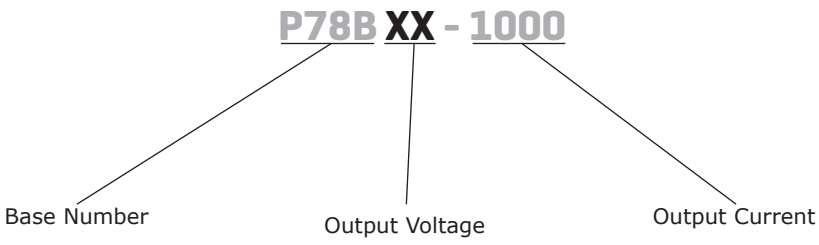

INPUT

parameter	conditions/description	min	typ	max	units
operating input voltage	1.8 Vdc output model all other output models		12 24		Vdc Vdc
no load input current	1.8 Vdc output model 3.3 Vdc output model 5 Vdc output model 6.5 & 9 Vdc output models 12 Vdc output model 15 Vdc output model		10 12 16 20 23 25		mA mA mA mA mA mA

OUTPUT

parameter	conditions/description	min	typ	max	units
maximum capacitive load[5]	15 Vdc output model all other output models			330 470	µF µF
line regulation	measured from low to high line, full load		0.2	0.4	%
load regulation	measured from 10~100% load, typical Vin 9 Vdc output model all other output models		 0.4 0.4	 1.0 0.6	 % %
voltage accuracy			±3		%
switching frequency	at nominal Vin		500		kHz

Note: 5. The capacitive load is test by minimum input and constant resistive load.

PROTECTIONS

parameter	conditions/description	min	typ	max	units
short circuit protection	continuous, auto recovery				

SAFETY AND COMPLIANCE

parameter	conditions/description	min	typ	max	units
safety approvals	designed to meet 62368-1: EN, IEC				
EMI	EN 55032 Class A/Class B				
ESD	EN61000-4-2 Air±8kV; Contact ±6kV, perf. Criteria A				
radiated immunity	EN61000-4-3, 10V/m, perf. Criteria A				
fast transient[6]	EN 61000-4-4, ±2kV, perf. Criteria A				
surge[6]	EN 61000-4-5, ±2kV, perf. Criteria A				
conducted immunity	EN61000-4-6, 10V/rms, perf. Criteria A				
magnetic field immunity	EN61000-4-8, 10A/m, perf. Criteria A				
MTBF	as per MIL-HDBK-217F, full load, 25 °C	13,300,000			hours
RoHS	yes				

Note: 6. External input capacitor required 1500µF/ 50V.

ENVIRONMENTAL

parameter	conditions/description	min	typ	max	units
operating temperature	see derating curve	-40		90	°C
storage temperature		-55		125	°C
operating humidity	non-condensing			95	%
temperature coefficient			0.015		%/ °C
maximum case temperature				105	°C
vibration	MIL-STD-202G				

SOLDERABILITY

parameter	conditions/description	min	typ	max	units
wave soldering[7,8]	see wave solder profile			210	°C

Note: 7. The wave solder profile is measured on lead temperature.
8. Need to keep the solder parts internal temperature less than about 210°C. For the period of solder dwell time should be 3 - 5 seconds, and should not over than 10 second.

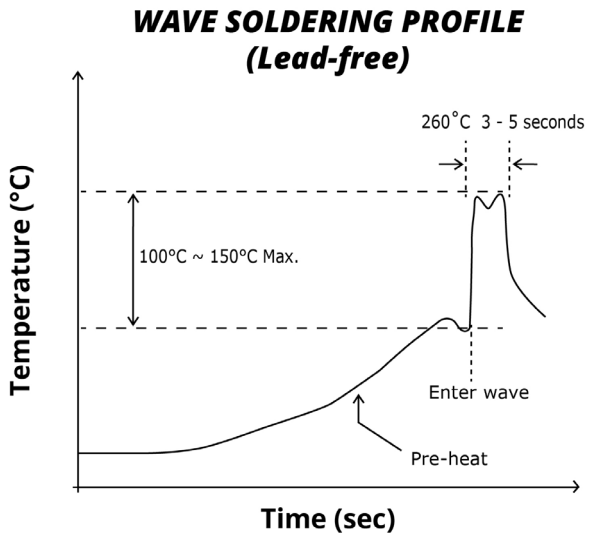

DERATING CURVE

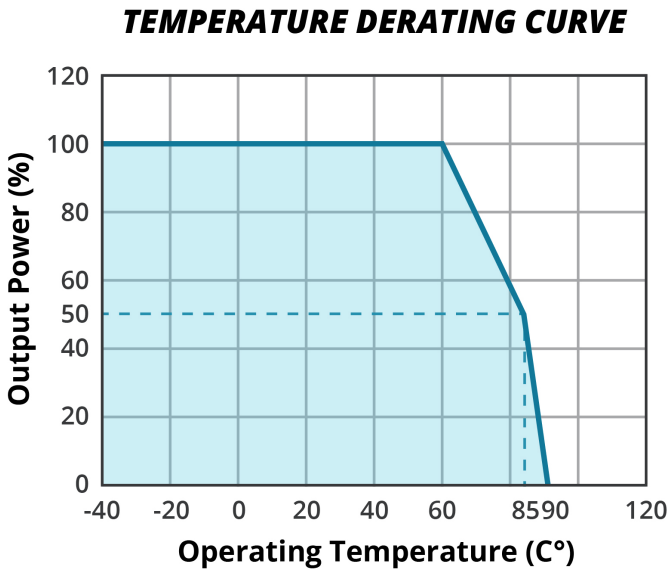

MECHANICAL

parameter	conditions/description	min	typ	max	units
dimensions	11.6 x 7.6 x 10.2				mm
case material	heat resistant UL94 V-0 plastic				
weight			1.9		g
cooling method	natural convection				

MECHANICAL DRAWING

units: mm
tolerance: ±0.25 mm

PIN CONNECTIONS	
PIN	Function
1	+Vin
2	GND
3	+Vout

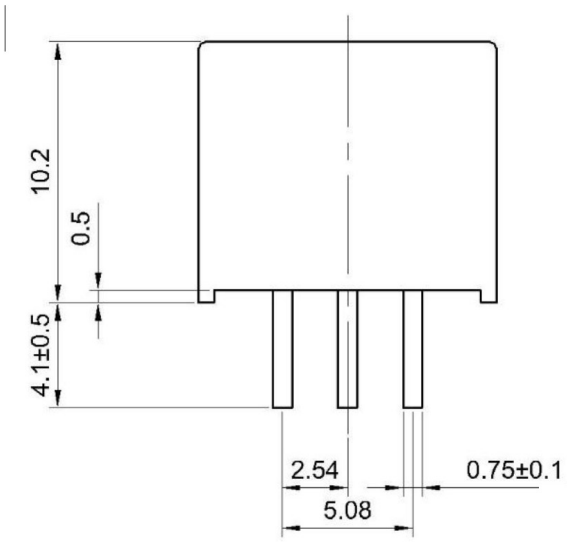

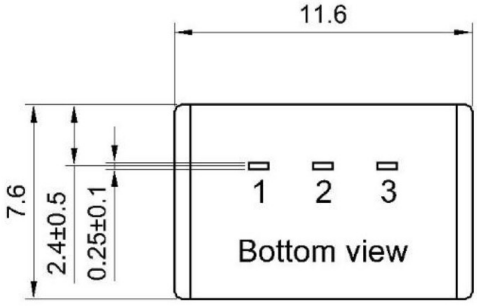

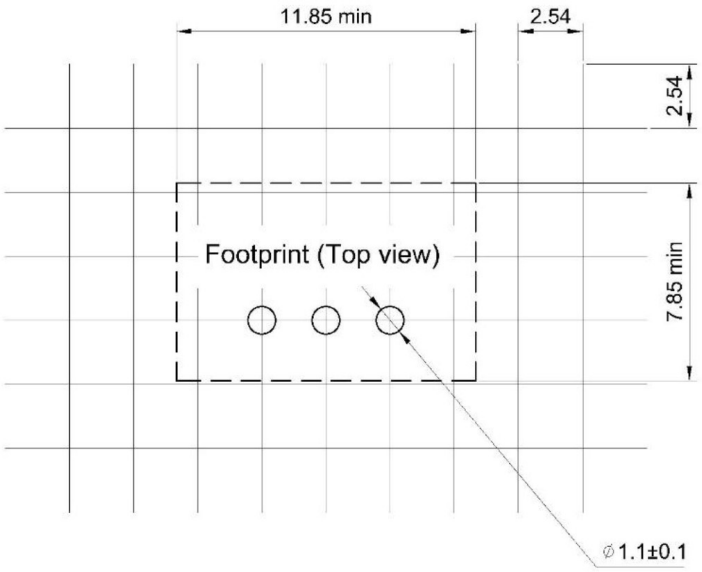

RIPPLE AND NOISE MEASUREMENT METHOD

Figure 1

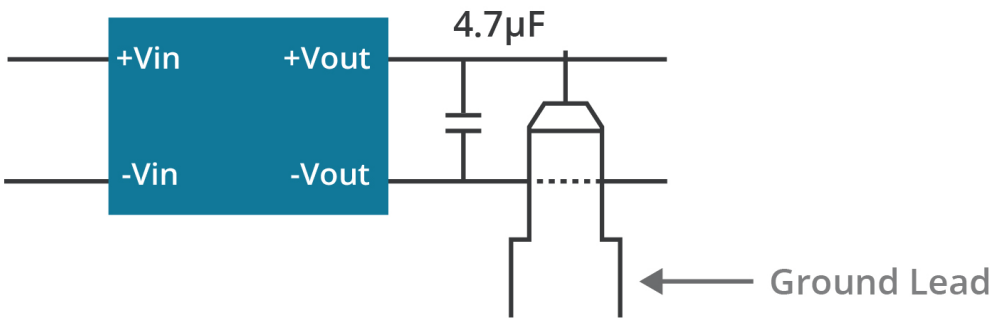

APPLICATION CIRCUIT

Figure 2

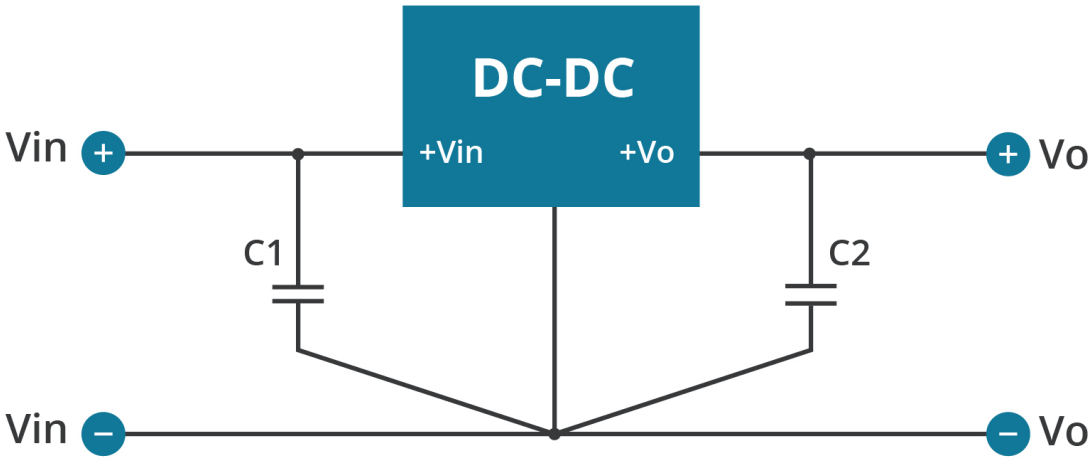

EMC RECOMMENDED CIRCUIT

Figure 3

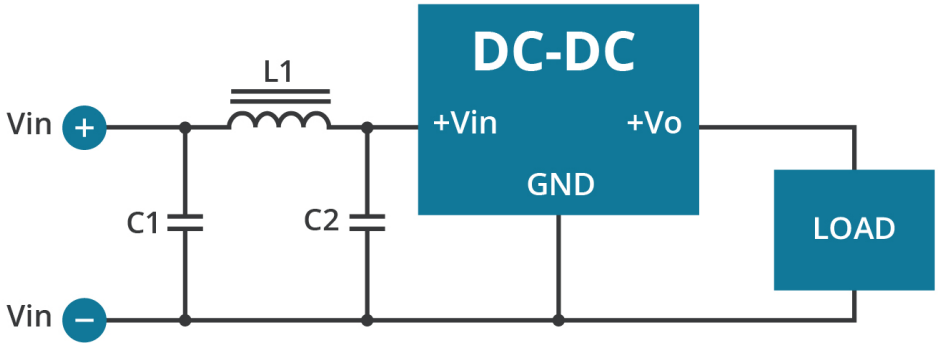

Table 1

COMPONENTS			
CLASS	C1	L1	C2
Class A	1,206 / 4.7µF / 50V / MLCC	4.7µH	-
Class B	1,206 / 4.7µF / 50V / MLCC x 2	10µH	1,206 / 4.7µF / 50V / MLCC

EFT AND SURGE EXTERNAL CAPACITOR REQUIRED

Figure 4



Table 2

C1
1,500 / 50V

REVISION HISTORY

rev.	description	date
1.0	initial release	06/28/2024
1.01	9 Vdc output model added	10/25/2024

The revision history provided is for informational purposes only and is believed to be accurate.

CUI INC
a bel group

Headquarters
15575 SW Sequoia Pkwy #100
Portland, OR 97224
800.275.4899
Fax 503.612.2383
cui.com
techsupport@cui.com

CUI offers a two (2) year limited warranty. Complete warranty information is listed on our website.

CUI reserves the right to make changes to the product at any time without notice. Information provided by CUI is believed to be accurate and reliable. However, no responsibility is assumed by CUI for its use, nor for any infringements of patents or other rights of third parties which may result from its use.

CUI products are not authorized or warranted for use as critical components in equipment that requires an extremely high level of reliability. A critical component is any component of a life support device or system whose failure to perform can be reasonably expected to cause the failure of the life support device or system, or to affect its safety or effectiveness.