CUI INC
a bel group



# SERIES: P78B-500 | DESCRIPTION: DC-DC CONVERTER

## FEATURES

- 0.5 A current output
- pin compatible with LM78XX linear regulators
- -40 ~ 85°C operating temperature
- input voltage range up to 4.75 ~ 36 Vdc
- continuous short circuit protection
- compact SIP3 package
- low ripple and noise
- designed to meet EN/IEC 62368-1




RoHS

## MODEL

| MODEL | input voltage typ (Vdc) | input voltage range (Vdc) | output voltage (Vdc) | output current max (mA) | output power typ (W) | ripple & noise[1] max (mVp-p) | efficiency[2] typ (%) |
|---|---|---|---|---|---|---|---|
| P7802B-500 | 24 | 4.75~36 | 1.8 | 500 | 0.9 | 50 | 90.0 |
| P7803B-500 | 24 | 4.75~36 | 3.3 | 500 | 1.65 | 50 | 94.5 |
| P7805B-500 | 24 | 6.5~36 | 5.0 | 500 | 2.5 | 50 | 95.5 |
| P7806B-500 | 24 | 8~36 | 6.5 | 500 | 3.25 | 60 | 96.5 |
| P7809B-500 | 24 | 11~36 | 9.0 | 500 | 4.5 | 70 | 96.5 |
| P7812B-500 | 24 | 15~36 | 12.0 | 500 | 6.0 | 70 | 96.5 |
| P7815B-500 | 24 | 18~36 | 15.0 | 500 | 7.5 | 70 | 96.5 |

Notes:
1. At the lowest input voltage, the loading is less 15% (75mA), the R&N will be 150mVp-p (max.).
2. At min Vin, full load at 25°C, and ±2% tolerance
3. All specifications measured at: Ta=25°C, nominal input voltage, rated output load, and after warm up unless otherwise specified.

## PART NUMBER KEY

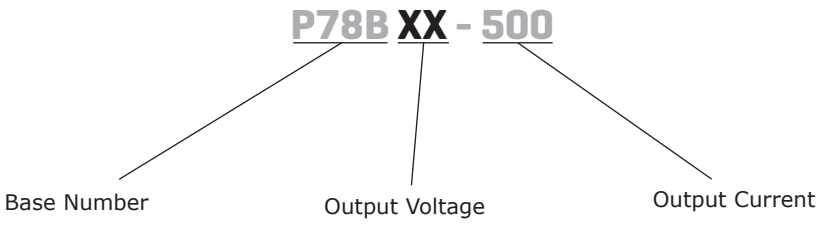

## INPUT

| parameter | conditions/description | min | typ | max | units |
|---|---|---|---|---|---|
| operating input voltage | | | | 36 | Vdc |
| no load input current | | | 2 | 7 | mA |

## OUTPUT

| parameter | conditions/description | min | typ | max | units |
|---|---|---|---|---|---|
| maximum capacitive load[4] | 1.8, 3.3, 5, 6.5, 9 Vdc output models<br>12 Vdc output model<br>15 Vdc output model | | | 470<br>330<br>270 | µF<br>µF<br>µF |
| line regulation | measured from low to high line, full load | | 0.2 | 0.4 | % |
| load regulation | measured from 10~100% load, typical Vin | | 0.8<br>0.4 | 1<br>0.6 | %<br>% |
| voltage accuracy | | | ±3 | | % |
| switching frequency | at nominal Vin | | 410 | | kHz |

Note: 4. The capacitive load is test by minimum input and constant resistive load.

## PROTECTIONS

| parameter | conditions/description | min | typ | max | units |
|---|---|---|---|---|---|
| short circuit protection | continuous, auto recovery | | | | |

## SAFETY AND COMPLIANCE

| parameter | conditions/description | min | typ | max | units |
|---|---|---|---|---|---|
| safety approvals | designed to meet 62368-1: EN, IEC | | | | |
| EMI | EN 55032 Class A/Class B | | | | |
| ESD | EN 61000-4-2 Air ±8 kV; Contact ±6 kV, perf. Criteria A | | | | |
| fast transient[5] | EN 61000-4-4, ±2 kV, perf. Criteria A | | | | |
| surge[5] | EN 61000-4-5, ±2 kV, perf. Criteria A | | | | |
| MTBF | as per MIL-HDBK-217F, full load, 25 °C | 3,300,000 | | | hours |
| RoHS | yes | | | | |

Note: 5. External circuit for testing (1500µF Electrolytic capacitor and TVS).

## ENVIRONMENTAL

| parameter | conditions/description | min | typ | max | units |
|---|---|---|---|---|---|
| operating temperature | see derating curve | -40 | | 85 | °C |
| storage temperature | | -55 | | 125 | °C |
| operating humidity | non-condensing | | | 95 | % |
| temperature coefficient | | | 0.02 | | %/ °C |
| maximum case temperature | | | | 100 | °C |
| vibration | MIL-STD-202G | | | | |

## DERATING CURVE

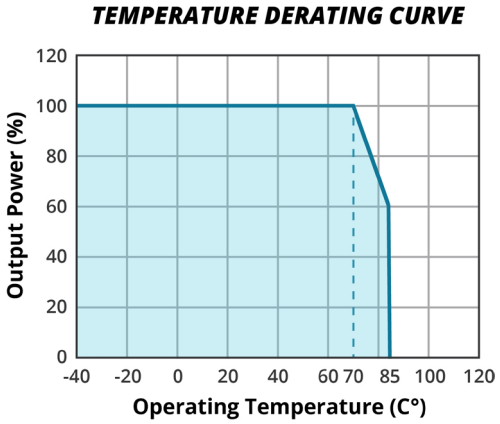


## MECHANICAL

| parameter | conditions/description | min | typ | max | units |
|---|---|---|---|---|---|
| dimensions | 11.6 x 7.6 x 10.2 | | | | mm |
| case material | UL94 V-0 plastic | | | | |
| weight | | | 1.85 | | g |
| cooling method | natural convection | | | | |

## MECHANICAL DRAWING

units: mm
tolerance: ±0.25 mm

| PIN CONNECTIONS | |
|---|---|
| PIN | Function |
| 1 | +Vin |
| 2 | GND |
| 3 | +Vout |

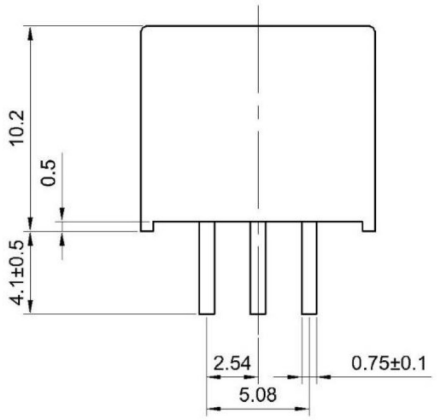


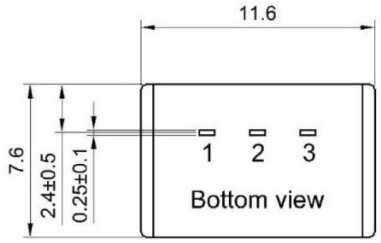


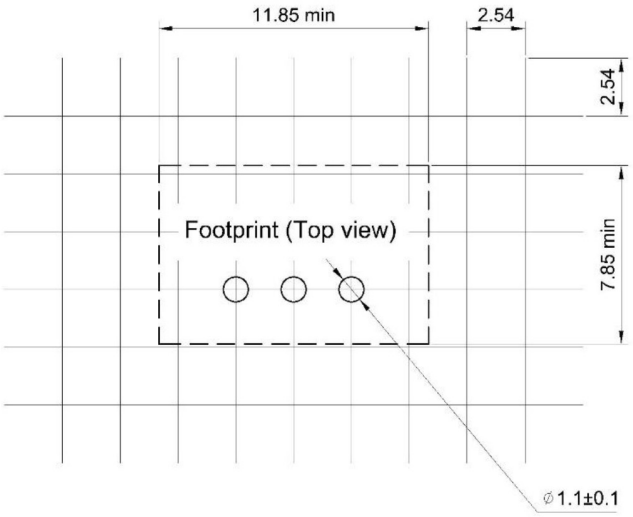

## RIPPLE AND NOISE MEASUREMENT METHOD

**Figure 1**

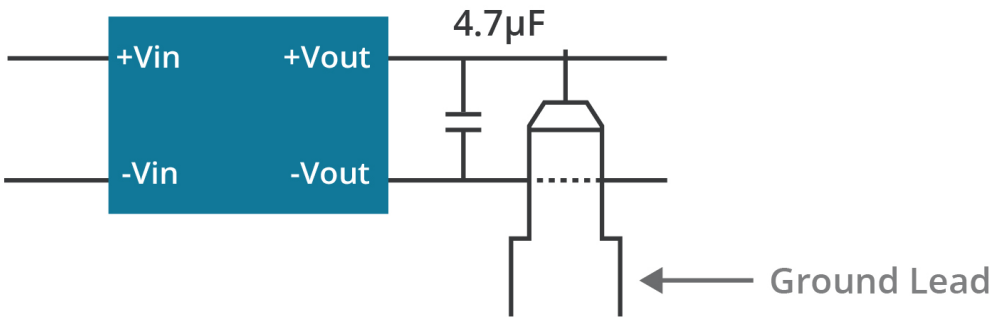


## APPLICATION CIRCUIT

**Figure 2**

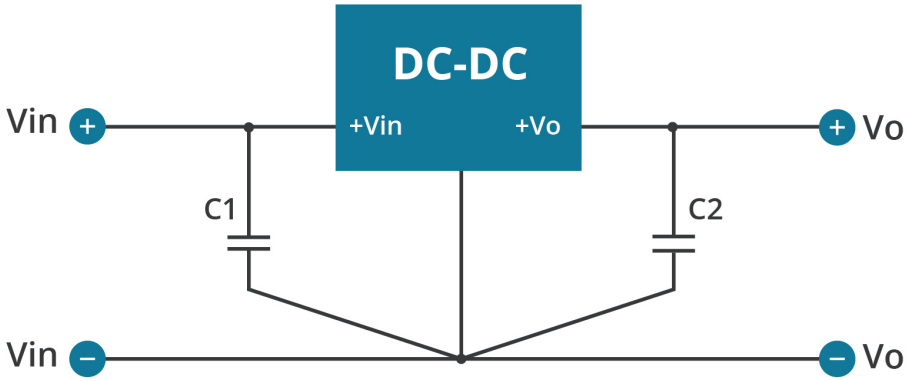

## EMI FILTERING

**Figure 3**

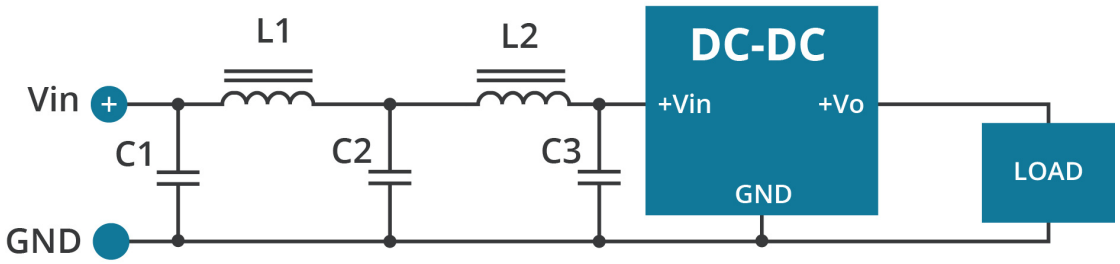


**Table 1**

| COMPONENTS | | | | | |
|---|---|---|---|---|---|
| CLASS | C1 | L1 | C2 | L2 | C3 |
| Class A | 1206 / 4.7µF / 50V / MLCC | 10µH | 1206 / 4.7µF / 50V / MLCC | - | - |
| Class B | 1210 / 10µF / 50V / MLCC | 22µH | 1210 / 10µF / 50V / MLCC | 200µH (common choke) | 1210 / 10µF / 50V / MLCC |

## EFT AND SURGE EXTERNAL CAPACITOR REQUIRED

**Figure 4**

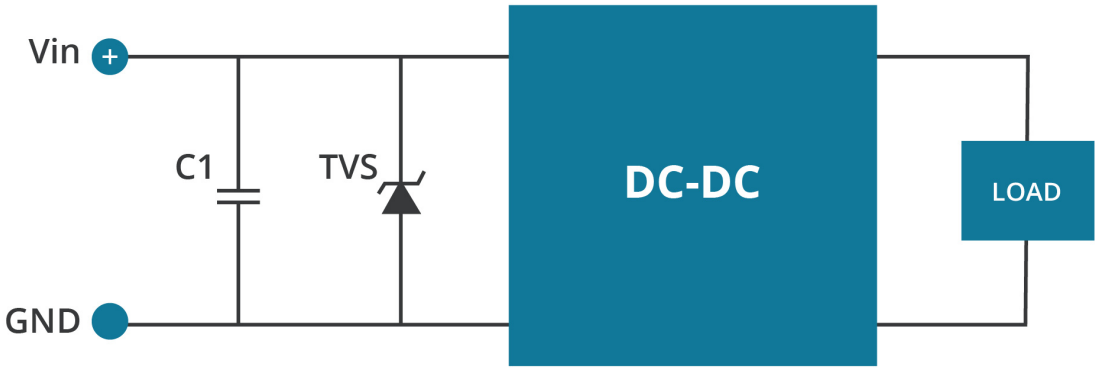


**Table 2**

| C1 | TVS |
|---|---|
| 1500 / 50V | 5.0SMLJ40A |

## REVISION HISTORY

| rev. | description | date |
|---|---|---|
| 1.0 | initial release | 09/09/2024 |

The revision history provided is for informational purposes only and is believed to be accurate.

CUI INC
a bel group

**Headquarters**
15575 SW Sequoia Pkwy #100
Portland, OR 97224
**800.275.4899**

Fax 503.612.2383
**cui**.com
techsupport@cui.com

CUI offers a two (2) year limited warranty. Complete warranty information is listed on our website.

CUI reserves the right to make changes to the product at any time without notice. Information provided by CUI is believed to be accurate and reliable. However, no responsibility is assumed by CUI for its use, nor for any infringements of patents or other rights of third parties which may result from its use.

CUI products are not authorized or warranted for use as critical components in equipment that requires an extremely high level of reliability. A critical component is any component of a life support device or system whose failure to perform can be reasonably expected to cause the failure of the life support device or system, or to affect its safety or effectiveness.