CUI INC
a bel group

SERIES: PDSE1-M | DESCRIPTION: DC-DC CONVERTER

FEATURES

- 1 W isolated output
- unregulated output
- compact SMT package
- single/dual output models
- continuous short circuit protection
- extended temperature range (-40~105°C)
- 1500 Vdc isolation
- no load input current as low as 5 mA
- efficiency up to 85%
- UL 62368 approval

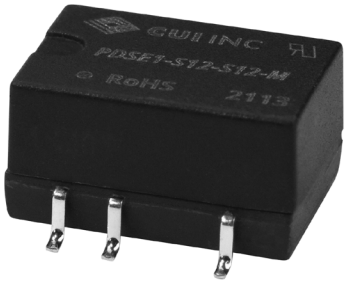

RoHS c UL us

MODEL

MODEL	input voltage		output voltage	output current		output power	ripple & noise[1]	efficiency[2]
	typ (Vdc)	range (Vdc)	(Vdc)	min (mA)	max (mA)	max (W)	max (mVp-p)	typ (%)
PDSE1-S3-S3-M	3.3	2.97~3.63	3.3	30	303	1	100	77
PDSE1-S3-S5-M	3.3	2.97~3.63	5	20	200	1	100	82
PDSE1-S3-S9-M	3.3	2.97~3.63	9	11	111	1	100	84
PDSE1-S3-S12-M[3]	3.3	2.97~3.63	12	8	83	1	100	84
PDSE1-S3-S15-M[3]	3.3	2.97~3.63	15	7	67	1	100	84
PDSE1-S3-S24-M[3]	3.3	2.97~3.63	24	4	42	1	100	84
PDSE1-S3-D3-M[3]	3.3	2.97~3.63	±3.3	±15	±152	1	100	77
PDSE1-S3-D5-M[3]	3.3	2.97~3.63	±5	±10	±100	1	100	82
PDSE1-S3-D9-M[3]	3.3	2.97~3.63	±9	±5	±56	1	100	82
PDSE1-S3-D12-M[3]	3.3	2.97~3.63	±12	±5	±42	1	100	82
PDSE1-S3-D15-M[3]	3.3	2.97~3.63	±15	±4	±34	1	100	82
PDSE1-S3-D24-M[3]	3.3	2.97~3.63	±24	±2	±21	1	100	84
PDSE1-S5-S3-M	5	4.5~5.5	3.3	30	303	1	75	74
PDSE1-S5-S5-M	5	4.5~5.5	5	20	200	1	75	82
PDSE1-S5-S9-M	5	4.5~5.5	9	12	111	1	75	83
PDSE1-S5-S12-M	5	4.5~5.5	12	9	84	1	75	83
PDSE1-S5-S15-M	5	4.5~5.5	15	7	67	1	75	83
PDSE1-S5-S24-M	5	4.5~5.5	24	4	42	1	75	85
PDSE1-S5-D5-M	5	4.5~5.5	±5	±10	±100	1	75	82
PDSE1-S5-D9-M	5	4.5~5.5	±9	±6	±56	1	75	83
PDSE1-S5-D12-M	5	4.5~5.5	±12	±5	±42	1	75	83
PDSE1-S5-D15-M	5	4.5~5.5	±15	±4	±34	1	75	83
PDSE1-S5-D24-M	5	4.5~5.5	±24	±3	±21	1	100	85
PDSE1-S12-S5-M	12	10.8~13.2	5	20	200	1	75	86
PDSE1-S12-S9-M	12	10.8~13.2	9	12	111	1	75	83
PDSE1-S12-S12-M	12	10.8~13.2	12	9	84	1	75	83
PDSE1-S12-S15-M	12	10.8~13.2	15	7	67	1	75	83

MODEL (CONTINUED)

	input voltage		output voltage	output current		output power	ripple & noise[1]	efficiency[2]
	typ (Vdc)	range (Vdc)	(Vdc)	min (mA)	max (mA)	max (W)	max (mVp-p)	typ (%)
PDSE1-S12-S24-M	12	10.8~13.2	24	4	42	1	100	85
PDSE1-S12-D5-M	12	10.8~13.2	±5	±10	±100	1	75	82
PDSE1-S12-D9-M	12	10.8~13.2	±9	±6	±56	1	75	83
PDSE1-S12-D12-M	12	10.8~13.2	±12	±5	±42	1	75	83
PDSE1-S12-D15-M	12	10.8~13.2	±15	±4	±36	1	75	83
PDSE1-S12-D24-M	12	10.8~13.2	±24	±3	±21	1	100	85
PDSE1-S15-S5-M	15	13.5~16.5	5	20	200	1	75	82
PDSE1-S15-S15-M	15	13.5~16.5	15	7	67	1	75	83
PDSE1-S15-D15-M	15	13.5~16.5	±15	±4	±34	1	75	83
PDSE1-S24-S5-M	24	21.6~26.4	5	20	200	1	75	82
PDSE1-S24-S9-M	24	21.6~26.4	9	12	111	1	75	83
PDSE1-S24-S12-M	24	21.6~26.4	12	9	84	1	75	83
PDSE1-S24-S15-M	24	21.6~26.4	15	7	67	1	75	83
PDSE1-S24-S24-M	24	21.6~26.4	24	4	42	1	100	85
PDSE1-S24-D5-M	24	21.6~26.4	±5	±10	±100	1	75	82
PDSE1-S24-D9-M	24	21.6~26.4	±9	±6	±56	1	75	83
PDSE1-S24-D12-M	24	21.6~26.4	±12	±5	±42	1	75	83
PDSE1-S24-D15-M	24	21.6~26.4	±15	±4	±34	1	75	83
PDSE1-S24-D24-M	24	21.6~26.4	±24	±3	±21	1	100	85

Notes:
1. Measured at nominal input, 20 MHz bandwidth oscilloscope, with 10 µF tantalum and 1 µF ceramic capacitors on the output.
2. Measured at nominal input voltage, full load.
3. Model is not UL certified.
4. All specifications are measured at Ta=25°C, humidity < 75%, nominal input voltage, and rated output load unless otherwise specified.

PART NUMBER KEY

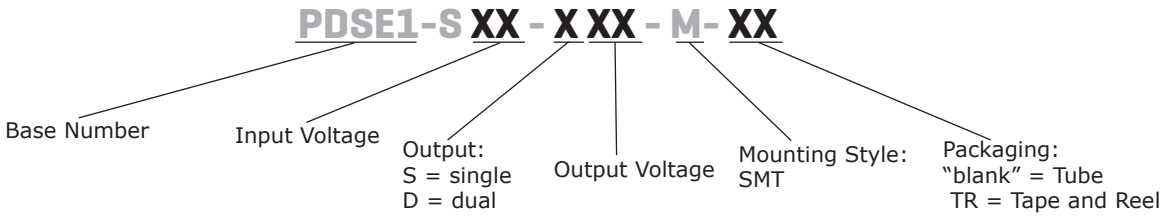

INPUT

parameter	conditions/description		min	typ	max	units
operating input voltage	3.3 Vdc input models		2.97	3.3	3.63	Vdc
	5 Vdc input models		4.5	5	5.5	Vdc
	12 Vdc input models		10.8	12	13.2	Vdc
	15 Vdc input models		13.5	15	16.5	Vdc
	24 Vdc input models		21.6	24	26.4	Vdc
surge voltage	for maximum of 1 second					
	3.3 Vdc input models		-0.7		5	Vdc
	5 Vdc input models		-0.7		9	Vdc
	12 Vdc input models		-0.7		18	Vdc
	15 Vdc input models		-0.7		21	Vdc
	24 Vdc input models		-0.7		30	Vdc
current (full load/no load)	3.3 Vdc input	3.3, ±3.3 Vdc output models		394/12	416/-	mA
		5, ±5, ±9, ±12 & ±15 Vdc ouput models		370/12	389/-	mA
		9, 12, 15, 24 & ±24 Vdc output models		361/12	379/-	mA
	5 Vdc input	3.3, 5 Vdc output models		270/5	286/10	mA
		±5 Vdc output models		244/5	257/10	mA
		±9, ±12 output models		241/12	254/20	mA
		all other models		241/18	254/30	mA
	12 Vdc input	5, ±5 Vdc output models		102/8	107/-	mA
		9, ±9, 12, ±12, 15, ±15 Vdc output		101/8	106/-	mA
		24, ±24 Vdc output models		99/8	103/-	mA
	15 Vdc input	5 Vdc output models		82/8	86/-	mA
		15, ±15 Vdc output models		81/8	85/-	mA
	24 Vdc input	5, ±5, 9, ±9, 12, ±12, 15, ±15 Vdc output models		51/8	55/-	mA
		24, ±24 Vdc output models		50/8	53/-	mA
filter	filter capacitor					

OUTPUT

parameter	conditions/description		min	typ	max	units
maximum capacitive load	3.3, 5 Vdc output models				2,400	µF
	±3.3, ±5 Vdc output models				1,200	µF
	9 Vdc output models				1,000	µF
	12, 15 Vdc output models				560	µF
	24, ±12, ±15 Vdc output models				220	µF
	±9 Vdc output models				470	µF
	±24 Vdc output models				100	µF
voltage accuracy	see tolerance envelope curves					
line regulation	for Vin change of 1%					
	3.3, ±3.3 Vdc output models				±1.5	%
	all other models				±1.2	%
load regulation	from 10% to full load					
	3.3 Vdc input models	3.3, ±3.3 Vdc output models			±20	%
		all other models			±15	%
	all other input models	3.3 Vdc output models			±20	%
		5, ±5 Vdc output models			±15	%
		all other models			±10	%
switching frequency	100% load, nominal input voltage			220~270		kHz
temperature coefficient	at full load			±0.02		%/°C

PROTECTIONS

parameter	conditions/description	min	typ	max	units
short circuit protection	continuous, self recovery				

SAFETY AND COMPLIANCE

parameter	conditions/description	min	typ	max	units
isolation voltage	input to output for 1 minute at 1 mA	1,500			Vdc
isolation resistance	input to output at 500 Vdc	1,000			MΩ
isolation capacitance	input to output, 100 kHz / 0.1 V		20		pF
safety approvals[5]	certified to 62368-1: UL designed to meet 62368: EN, BS EN				
conducted emissions	CISPR32/EN55032, class B (external circuit required, see Figures 3, 4)				
radiated emissions	CISPR32/EN55032, class B (external circuit required, see Figures 3, 4)				
ESD	3.3, 5 Vdc input models IEC/EN61000-4-2, air ± 8 kV; contact ± 4 kV, class B				
	12, 15, 24 Vdc input models IEC/EN61000-4-2, contact ± 6 kV, class B				
MTBF	as per MIL-HDBK-217F, 25°C	3,500,000			hours
RoHS	yes				

Notes: 5. Refer to the model table.

ENVIRONMENTAL

parameter	conditions/description	min	typ	max	units
operating temperature	see derating curves	-40		105	°C
storage temperature		-55		125	°C
storage humidity	non-condensing			95	%
case temperature rise	5 Vdc input models at 25°C 5, ±5, 9, ±9, 12, ±12, 15, ±15, 24, ±24 Vdc output models		15		°C
	all other input & output models at 25°C		25		°C

DERATING CURVES

TEMPERATURE DERATING CURVE
3.3 Vdc input models

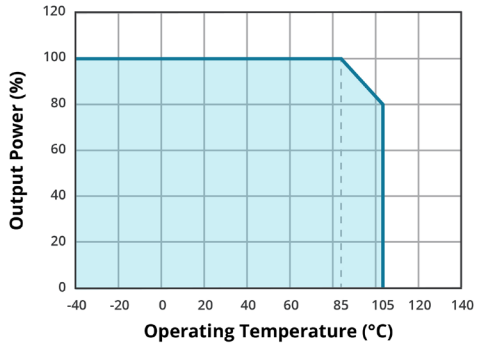

TEMPERATURE DERATING CURVE
all other input models

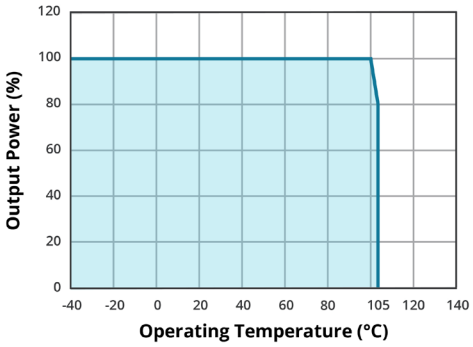

OUTPUT REGULATION CURVE
3.3 Vdc input / 3.3 & ±3.3 Vdc output
(nominal input)

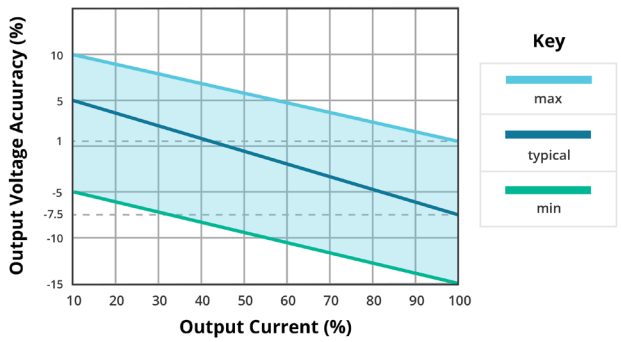

OUTPUT REGULATION CURVE
3.3 Vdc input / all other output models
(nominal input)

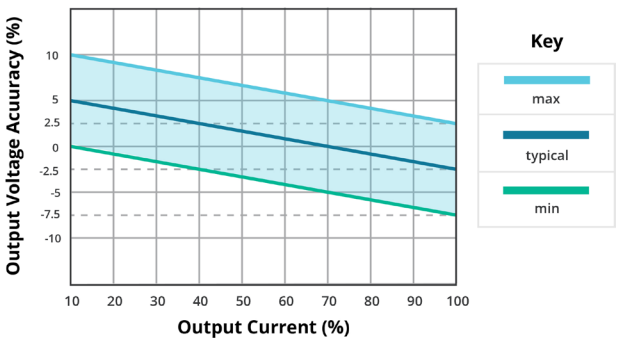

DERATING CURVES (CONTINUED)

OUTPUT REGULATION CURVE
5 Vdc input / 3.3 Vdc output model
(nominal input)

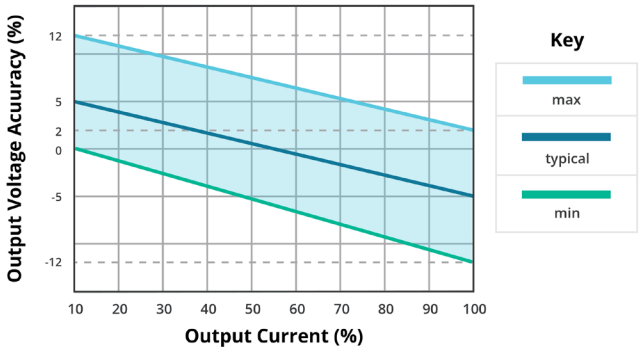

OUTPUT REGULATION CURVE
5 Vdc input / all other output models
(nominal input)

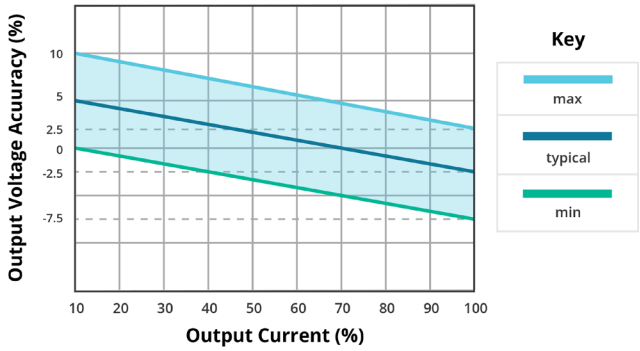

OUTPUT REGULATION CURVE
all other input and output models
(nominal input)

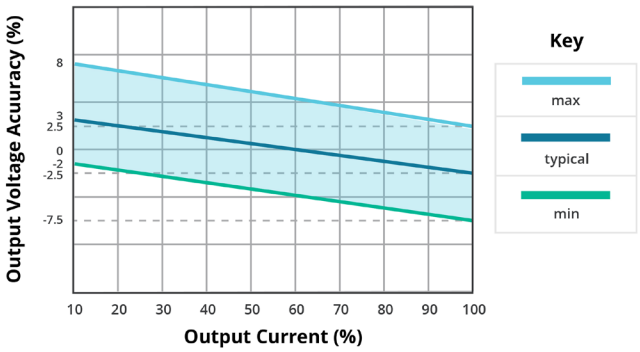

EFFICIENCY CURVES

EFFICIENCY VS INPUT VOLTAGE
(full load)

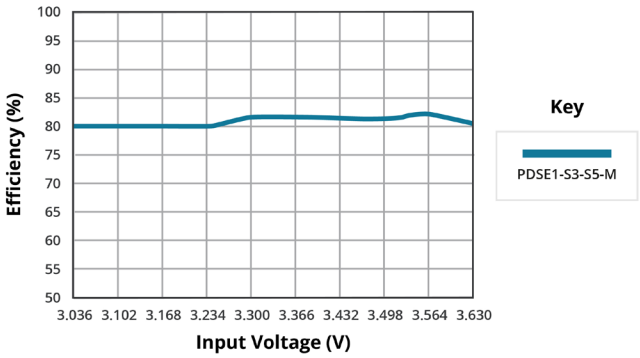

EFFICIENCY VS OUTPUT CURRENT
(Vin = 3.3V)

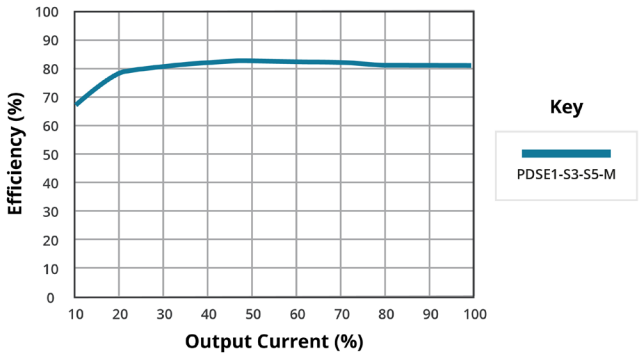

SOLDERABILITY

parameter	conditions/description	min	typ	max	units
reflow soldering	see reflow soldering profile Maximum duration >217°C is 60 seconds. For actual application, refer to IPC/JEDEC J-STD-020D.1			245	°C

WAVE SOLDERING PROFILE

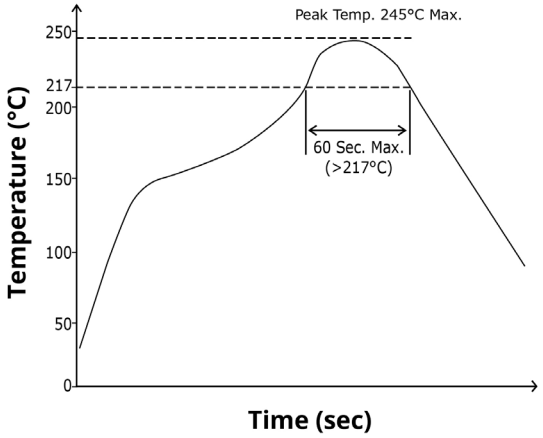

MECHANICAL

parameter	conditions/description	min	typ	max	units
dimensions	single output models: 13.20 x 8.50 x 7.25[0.520 x 0.335 x 0.285 inch] dual output models: 15.24 x 8.50 x 7.25[0.600 x 0.335 x 0.285 inch]				mm mm
case material	black flame-retardant and heat-resistant plastic (UL94V-0)				
weight			1.4		g

MECHANICAL DRAWING (SINGLE OUTPUT)

units: mm [inch]
tolerance: ±0.25[±0.010]
pin section tolerance: ±0.10[±0.004]

PIN CONNECTIONS	
PIN	Function
1	GND
2	Vin
4	0V
5	+Vout
8	NC

NC = No connect

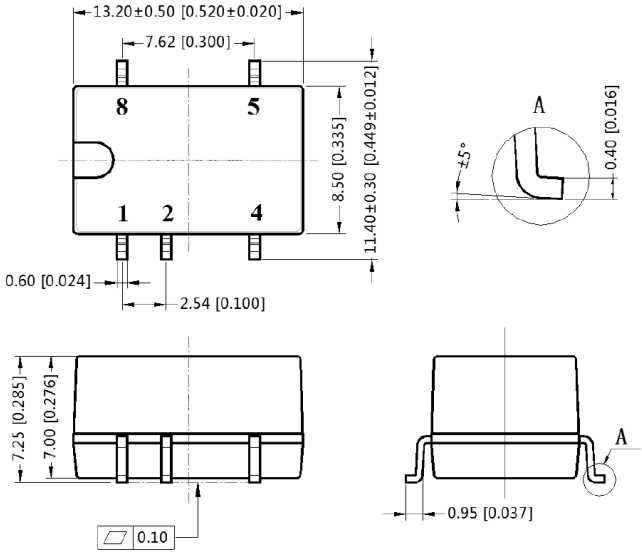

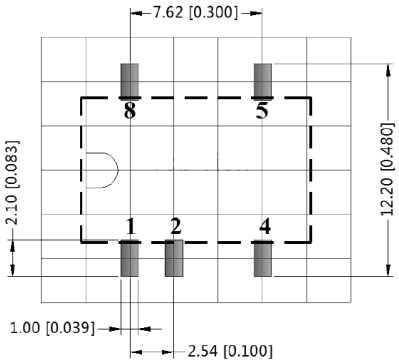

Note: Grid 2.54*2.54mm
Recommended PCB Layout
Top View

MECHANICAL DRAWING (DUAL OUTPUT)

units: mm [inch]
tolerance: ±0.25[±0.010]
pin section tolerance: ±0.10[±0.004]

PIN CONNECTIONS	
PIN	Function
1	GND
2	Vin
4	0V
5	-Vout
7	+Vout
10	NC

NC = No connect

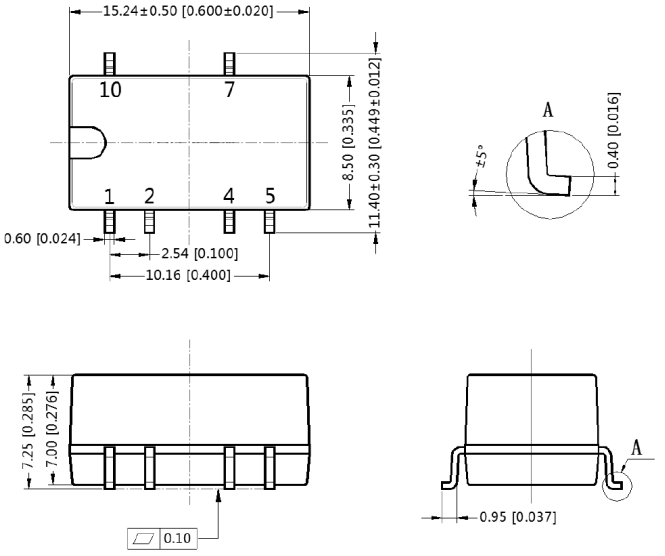

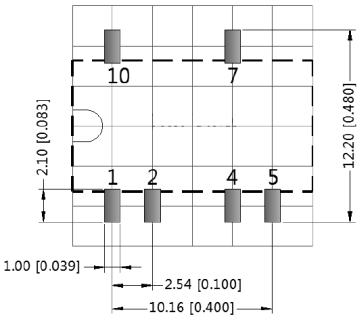

Note: Grid 2.54*2.54mm
Recommended PCB Layout
Top View

APPLICATION CIRCUIT

If you want to further reduce the input and output ripple, a filter capacitor may be connected to the input and output terminals (Figures 1 & 2) provided that the capacitance is less than the maximum capacitive load of the model, otherwise start-up problems may be caused if the capacitance is too large.

Figure 1
Single Output Models

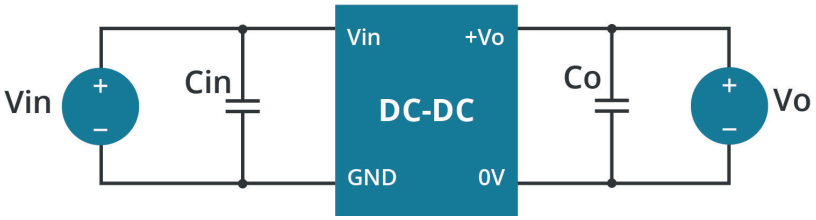

Table 1

Vin (Vdc)	Cin (µF / V)	Vo (Vdc)	Co (µF / V)
3.3	4.7 µF / 16 V	3.3	10 µF / 16 V
		5	10 µF / 16 V
		9	4.7 µF / 16 V
		12	2.2 µF / 25 V
		15	1 µF / 25 V
		24	0.47 µF / 50 V
5	4.7 µF	3.3, 5	10 µF
		9	4.7 µF
		12	2.2 µF
		15	1.0 µF
		24	0.47 µF
12	2.2 µF / 25 V	5	10 µF / 16 V
15	2.2 µF/ 25 V	9	2.2 µF / 16 V
24	1 µF/ 50 V	12	2.2 µF/ 25 V
--	--	15	1 µF/ 25 V
--	--	24	1 µF/ 50 V

Figure 2
Dual Output Models

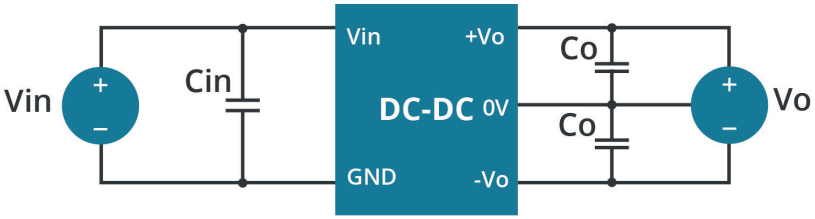

Table 2

Vin (Vdc)	Cin (µF / V)	Vo (Vdc)	Co (µF / V)
3.3	10 µF / 16 V	±3.3	10 µF / 16 V
		±5	10 µF / 16 V
		±9	2.2 µF / 16 V
		±12	2.2 µF / 25 V
		±15	1 µF / 25 V
		±24	1 µF / 50 V
5	4.7 µF	±5	4.7 µF
		±9	2.2 µF
		±12, ±15, ±24	1 µF
12	2.2 µF / 25 V	±5	4.7 µF / 16 V
15	2.2 µF / 25 V	±9	1 µF / 16 V
24	1 µF / 50	±12	1 µF / 25 V
--	--	±15	0.47 µF / 25 V
--	--	±24	0.48 µF / 50 V

EMC RECOMMENDED CIRCUIT

Figure 3
Single Output Models

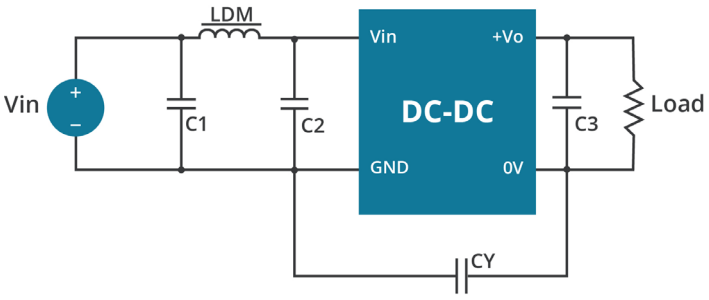

Figure 4
Dual Output Models

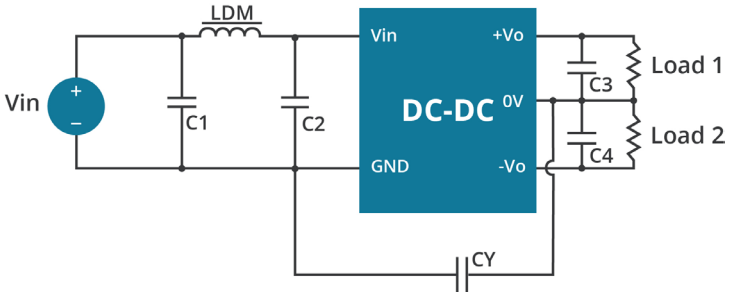

Table 3

Recommended External Circuit Components			
Vin (Vdc)	Vo (Vdc)	3.3, 5, 9	12, 15, 24
3.3	C1, C2	4.7 µF / 16 V	
	C3, C4	refer to the Co in Table 1	
	CY	270 pF / 2 kV	
	LDM	6.8 µH	
5	CY	--	1 nF / 2 kVdc
	C3	refer to the Co in Tables 1, 2	
	C1, C2	4.7 µF / 25 V	4.7 µF / 25 V
	LDM	6.8 µH	6.8 µH
12, 15, 24	C1	4.7 µF / 50 V	
	C2	4.7 µF / 50 V	
	CY	270 pF / 2 kVdc	
	C3, C4	refer to the Co in Tables 1, 2	
	LDM	6.8 µH	

REVISION HISTORY

rev.	description	date
1.0	initial release	05/10/2019
1.01	safeties updated in features and safety line, packaging removed	01/18/2021
1.02	model table updated	03/29/2021
1.03	product image updated	04/20/2021
1.04	derating curves and circuit figures and tables updated	07/13/2021
1.05	CE certification removed	11/07/2022
1.06	3.3 V input models added	06/14/2023
1.07	UL certification updated for 3.3 V input models	08/24/2023
1.08	table 3 updated	03/19/2024

The revision history provided is for informational purposes only and is believed to be accurate.

CUI INC
a bel group

Headquarters
20050 SW 112th Ave.
Tualatin, OR 97062
800.275.4899

Fax 503.612.2383
cui.com
techsupport@cui.com

CUI offers a two (2) year limited warranty. Complete warranty information is listed on our website.

CUI reserves the right to make changes to the product at any time without notice. Information provided by CUI is believed to be accurate and reliable. However, no responsibility is assumed by CUI for its use, nor for any infringements of patents or other rights of third parties which may result from its use.

CUI products are not authorized or warranted for use as critical components in equipment that requires an extremely high level of reliability. A critical component is any component of a life support device or system whose failure to perform can be reasonably expected to cause the failure of the life support device or system, or to affect its safety or effectiveness.