CUI INC
a bel group

SERIES: PESE2-M | DESCRIPTION: DC-DC CONVERTER

FEATURES

- 2 W isolated output
- single unregulated output
- 3,000 Vdc isolation
- continuous short circuit protection
- extended temperature range (-40~105°C)
- efficiency up to 86%
- designed to meet EN/BS EN 62368-1



RoHS

MODEL

MODEL	input voltage		output voltage	output current		output power	ripple & noise[1]	efficiency[2]
	typ (Vdc)	range (Vdc)	(Vdc)	min (mA)	max (mA)	max (W)	max (mVp-p)	typ (%)
PESE2-S5-S3-M	5	4.5~5.5	3.3	40	400	1.32	200	78
PESE2-S5-S5-M[3]	5	4.5~5.5	5	40	400	2	200	84
PESE2-S5-S7-M	5	4.5~5.5	7	29	286	2	200	84
PESE2-S5-S9-M	5	4.5~5.5	9	22	222	2	200	85
PESE2-S5-S12-M	5	4.5~5.5	12	17	167	2	200	85
PESE2-S5-S15-M	5	4.5~5.5	15	13	133	2	200	86
PESE2-S5-S24-M	5	4.5~5.5	24	8	83	2	200	86
PESE2-S12-S5-M[3]	12	10.8~13.2	5	40	400	2	150	83
PESE2-S12-S9-M	12	10.8~13.2	9	22	222	2	150	83
PESE2-S12-S12-M	12	10.8~13.2	12	17	167	2	150	84
PESE2-S12-S15-M	12	10.8~13.2	15	13	133	2	150	84
PESE2-S12-S24-M	12	10.8~13.2	24	8	83	2	150	85
PESE2-S15-S5-M	15	13.5~16.5	5	40	400	2	150	83
PESE2-S15-S15-M	15	13.5~16.5	15	13	133	2	150	84
PESE2-S24-S5-M[3]	24	21.6~26.4	5	40	400	2	150	83
PESE2-S24-S9-M	24	21.6~26.4	9	22	222	2	150	83
PESE2-S24-S12-M	24	21.6~26.4	12	17	167	2	150	84
PESE2-S24-S15-M	24	21.6~26.4	15	13	133	2	150	84
PESE2-S24-S24-M	24	21.6~26.4	24	8	83	2	150	85

Notes:
1. Measured at nominal input, 20 MHz bandwidth oscilloscope with 10 µF tantalum and 1 µF ceramic capacitor on output (see Application circuit).
2. Measured at nominal input voltage, full load.
3. Model is UL certified.
4. All specifications are measured at Ta=25°C, humidity < 75%, nominal input voltage, and rated output load unless otherwise specified.

PART NUMBER KEY

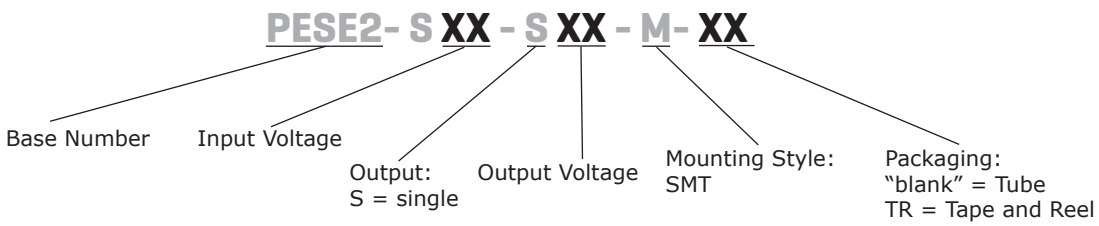

INPUT

parameter	conditions/description		min	typ	max	units
operating input voltage	5 Vdc input models		4.5	5	5.5	Vdc
	12 Vdc input models		10.8	12	13.2	Vdc
	15 Vdc input models		13.5	15	16.5	Vdc
	24 Vdc input models		21.6	24	26.4	Vdc
surge voltage	for maximum of 1 second					
	5 Vdc input models		-0.7		9	Vdc
	12 Vdc input models		-0.7		18	Vdc
	15 Vdc input models		-0.7		21	Vdc
	24 Vdc input models		-0.7		30	Vdc
current	5 Vdc input models	3.3 Vdc output models		339/8	357/--	mA
		5, 7 Vdc output models		477/8	500/--	mA
		9, 12 Vdc output models		471/8	494/--	mA
		15, 24 Vdc output models		466/8	488/--	mA
	12 Vdc input models			196/8		mA
	15 Vdc input models			161/8		mA
	24 Vdc input models			98/8		mA
filter	filter capacitor					

OUTPUT

parameter	conditions/description	min	typ	max	units
maximum capacitive load[5]	3.3, 5 Vdc output models			2,400	µF
	9 Vdc output models			1,000	µF
	12, 15 Vdc output models			560	µF
	24 Vdc output models			220	µF
voltage accuracy	see output regulation curves				
line regulation	for Vin change of ±1%				
	3.3 Vdc output models			±1.5	%
	all other output models			±1.2	%
load regulation	from 10% to full load				
	3.3 Vdc output models			20	%
	5 Vdc output models			15	%
	all other models			10	%
switching frequency	100% load, nominal input voltage				
	5 Vdc input models		220		kHz
	all other input models		260		kHz
temperature coefficient	at full load		±0.02		%/°C

Note: 5. Tested at input voltage range and full load.

PROTECTIONS

parameter	conditions/description	min	typ	max	units
short circuit protection	continuous, auto recovery				

SAFETY AND COMPLIANCE

parameter	conditions/description	min	typ	max	units
isolation voltage	input to output for 1 minute at 1 mA	3,000			Vdc
isolation resistance	input to output at 500 Vdc	1,000			MΩ
isolation capacitance	input to output, 100 kHz / 0.1 V		20		pF
safety approvals[6]	certified to 62368-1: UL designed to meet 62368-1: EN/BS EN				
conducted emissions	CISPR 32/EN 55032 Class B				
radiated emissions	CISPR 32/EN 55032 Class B				
ESD	IEC/EN 61000-4-2 Air ±8kV, Contact ±6kV				
MTBF	as per MIL-HDBK-217F, 25°C	3,500,000			hours
RoHS	yes				

Note: 6. See the model table.

ENVIRONMENTAL

parameter	conditions/description	min	typ	max	units
operating temperature	see derating curves	-40		105	°C
storage temperature		-55		125	°C
storage humidity	non-condensing	5		95	%
case temperature rise	at 25°C		25		°C

DERATING CURVES

TEMPERATURE DERATING CURVE

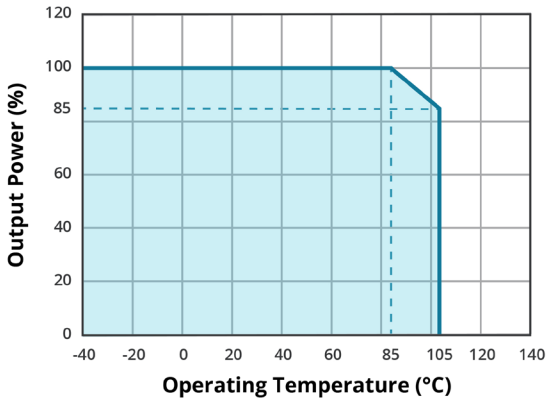

DERATING CURVES (CONTINUED)

OUTPUT REGULATION CURVE
5 Vdc input model/3.3 output model
(nominal input)

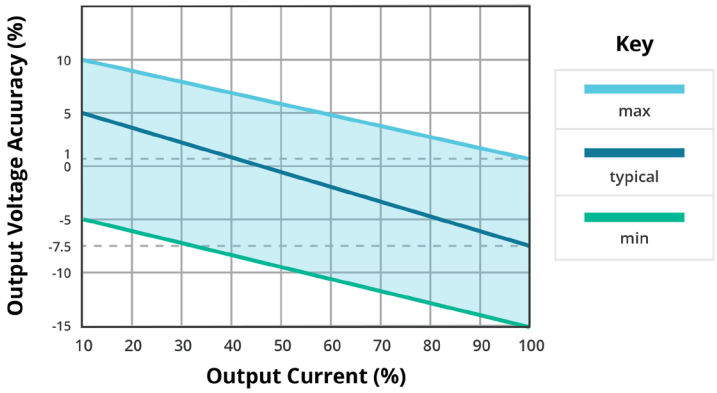

OUTPUT REGULATION CURVE
5 Vdc input model/all other output models
(nominal input)

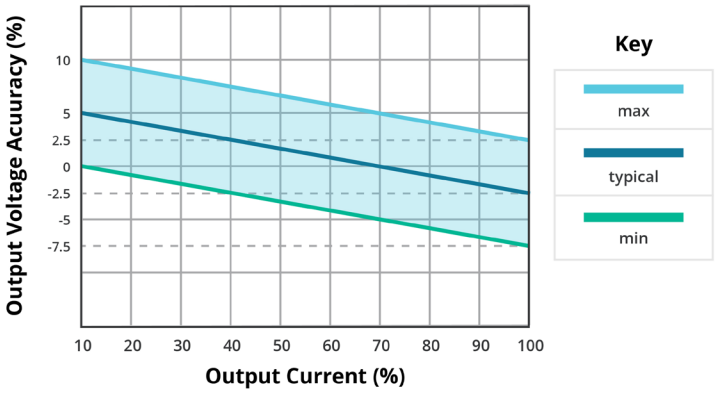

OUTPUT REGULATION CURVE
all other input and output models
(nominal input)

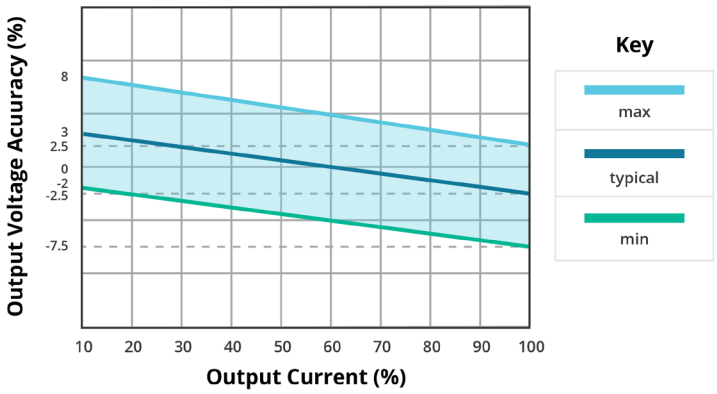

EFFICIENCY CURVES

EFFICIENCY VS INPUT VOLTAGE
PESE2-S5-S5-M
(full load)

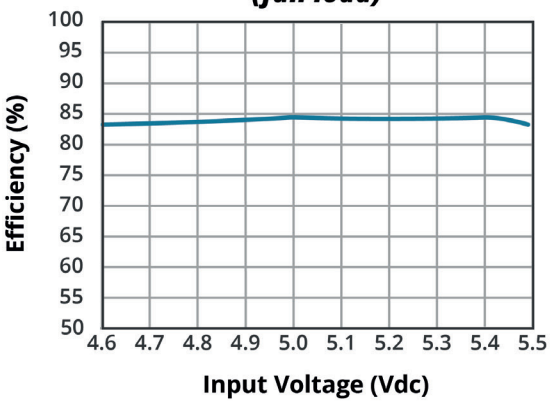

EFFICIENCY VS OUTPUT LOAD
PESE2-S5-S5-M
(Vin = 5 V)

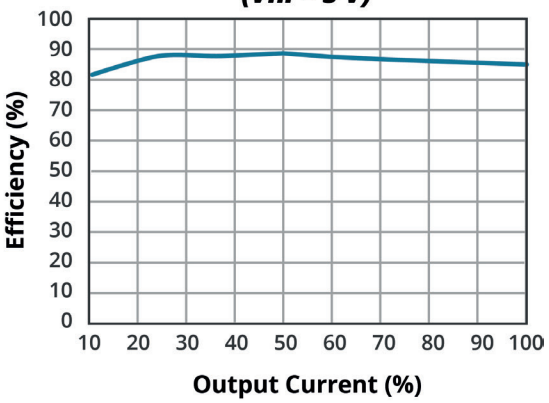

EFFICIENCY CURVES (CONTINUED)

EFFICIENCY VS INPUT VOLTAGE
PESE2-S12-S5-M
(full load)

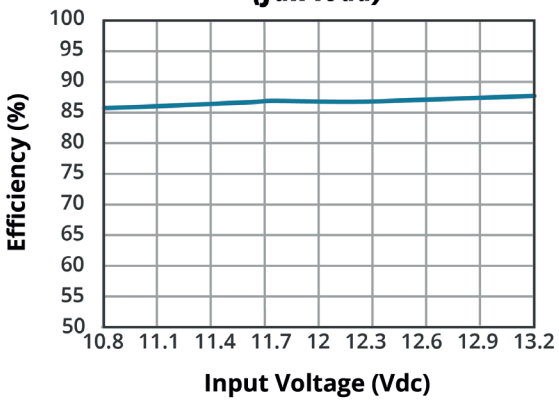

EFFICIENCY VS OUTPUT LOAD
PESE2-S12-S5-M
(Vin = 12 V)

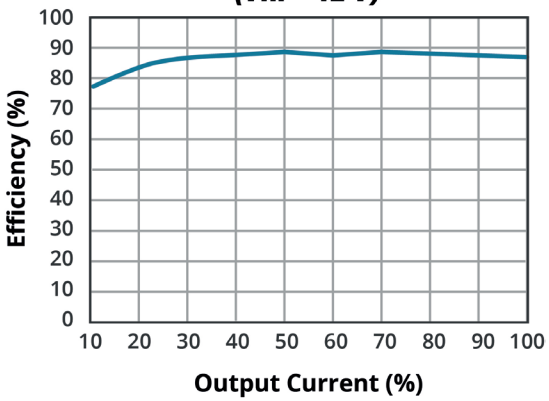

EFFICIENCY VS INPUT VOLTAGE
PESE2-S24-S5-M
(full load)

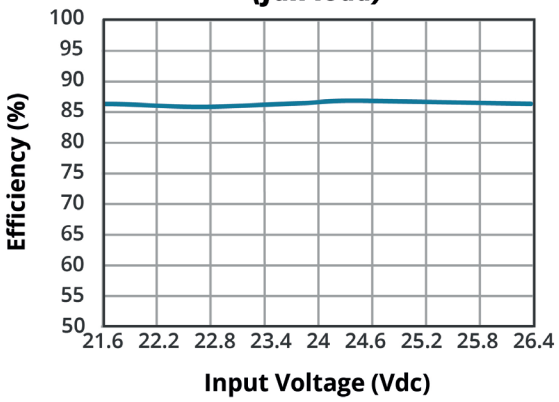

EFFICIENCY VS OUTPUT LOAD
PESE2-S24-S5-M
(Vin = 24 V)

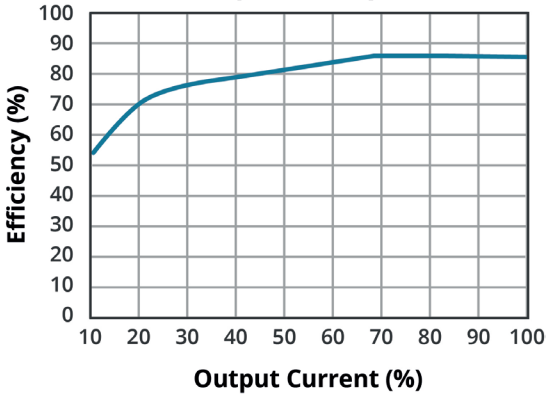

MECHANICAL

parameter	conditions/description	min	typ	max	units
dimensions	13.20 x 11.40 x 7.25 [0.520 x 0.448 x 0.285 inch]				mm
case material	black flame-retardant and heat-resistant plastic (UL94V-0)				
weight			1.4		g

MECHANICAL DRAWING

units: mm [inch]
tolerance: ±0.25 [±0.010]
pin section tolerance: ±0.10 [±0.004]

PIN CONNECTIONS	
PIN	Function
1	GND
2	Vin
4	0V
5	+Vo
8	NC

NC = No connect

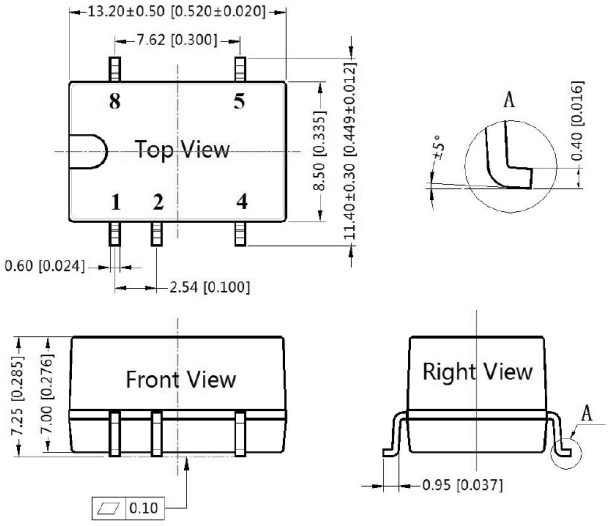

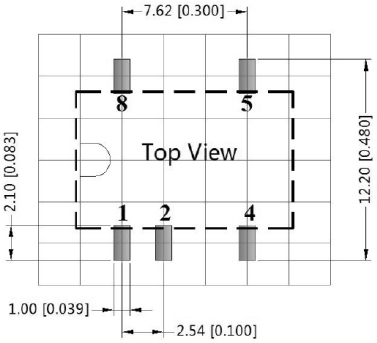

Note: Grid 2.54*2.54mm

APPLICATION CIRCUIT

If you want to further reduce the input and output ripple, a filter capacitor may be connected to the input and output terminals (Figure 1) provided that the capacitance is less than the maximum capacitive load of the model, otherwise start-up problems may be caused if the capacitance is too large.

Figure 1

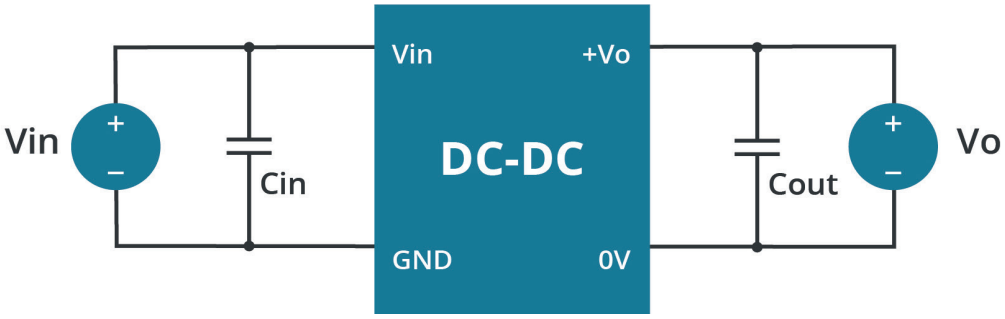

Table 1

Vin (Vdc)	Cin (µF / V)	Vo (Vdc)	Cout (µF / V)
5	4.7 / 16	3.3 / 5	10 / 16
---	---	7 / 9	4.7 / 16
---	---	12	2.2 / 25
---	---	15	1 / 25
---	---	24	0.47 / 50
12	2.2 / 25	5	10 / 10
15	1 / 25	9	2.2 / 25
24	1 / 50	12	2.2 / 25
---	---	15	1 / 25
---	---	24	0.47 / 50

EMC RECOMMENDED CIRCUIT

Figure 2

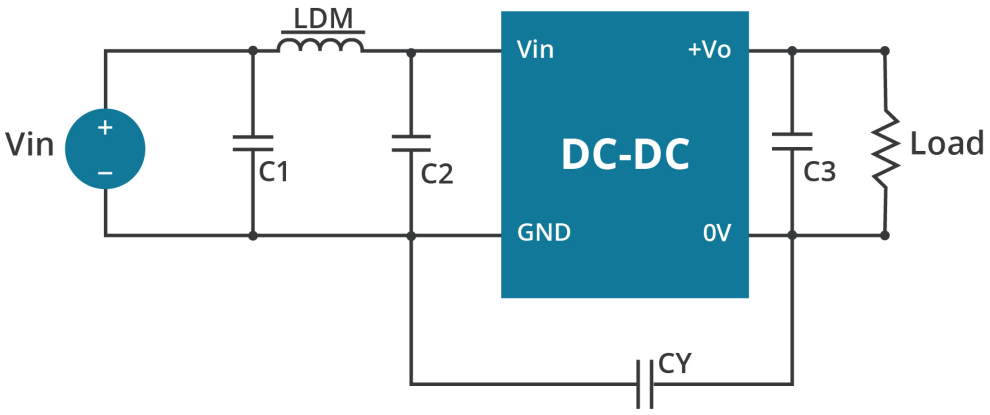

Table 2

Recommended External Circuit Components		
Vin	5 Vdc	12 / 15 / 24 Vdc
C1, C2	4.7 µF / 16 V	4.7 µF / 50 V
C3	refer to the Cout in Table 1	
CY	270 pF / 4 kV	270 pF / 3 kV
LDM	6.8 µH	

REVISION HISTORY

rev.	description	date
1.0	initial release	07/23/2021
1.01	model table updated	01/05/2022
1.02	CE certification added to PESE2-S15-S15-M	08/11/2022
1.03	CE certification removed	11/10/2022
1.04	5 V input models added	03/15/2024

The revision history provided is for informational purposes only and is believed to be accurate.

CUI INC
a bel group

Headquarters
20050 SW 112th Ave.
Tualatin, OR 97062
800.275.4899

Fax 503.612.2383
cui.com
techsupport@cui.com

CUI offers a two (2) year limited warranty. Complete warranty information is listed on our website.

CUI reserves the right to make changes to the product at any time without notice. Information provided by CUI is believed to be accurate and reliable. However, no responsibility is assumed by CUI for its use, nor for any infringements of patents or other rights of third parties which may result from its use.

CUI products are not authorized or warranted for use as critical components in equipment that requires an extremely high level of reliability. A critical component is any component of a life support device or system whose failure to perform can be reasonably expected to cause the failure of the life support device or system, or to affect its safety or effectiveness.