CUI INC
a bel group

SERIES: PTP20 | DESCRIPTION: DC-DC CONVERTER

FEATURES

- 20 W continuous power
- 2:1 input range (9~18, 18~36 and 36~75 Vdc)
- 5,000 Vac / 7,000 Vdc isolation
- certified to IEC/EN 60601-1, 2xMOPP
- EN 55011 Class A without external components
- -40°C to 100°C operating temperature
- output over current, short circuit and UVLO protections



MODEL

MODEL	input voltage typ (Vdc)	input voltage range (Vdc)	output voltage (Vdc)	output current max (mA)	output power max (W)	ripple and noise[1] max (mVp-p)	efficiency[2] typ (%)
PTP20-12-S5	12	9~18	5	4,000	20	60	86
PTP20-12-S12	12	9~18	12	1,670	20	60	89
PTP20-12-S15	12	9~18	15	1,333	20	60	88
PTP20-12-S24	12	9~18	24	840	20	120	89
PTP20-24-S5	24	18~36	5	4,000	20	60	87
PTP20-24-S12	24	18~36	12	1,670	20	60	89
PTP20-24-S15	24	18~36	15	1,333	20	60	88
PTP20-24-S24	24	18~36	24	840	20	120	88
PTP20-48-S5	48	36~75	5	4,000	20	60	87
PTP20-48-S12	48	36~75	12	1,670	20	60	89
PTP20-48-S15	48	36~75	15	1,333	20	60	88
PTP20-48-S24	48	36~75	24	840	20	120	90

Note:
1. Measured at 20 MHz bandwidth.
2. The efficiency is test by nominal input and max full load at 25°C, the tolerance for the efficiency measurement is plus and minus 2%~3%.
3. All specifications are measured at Ta=25°C, nominal input voltage and full output load unless otherwise specified.

PART NUMBER KEY

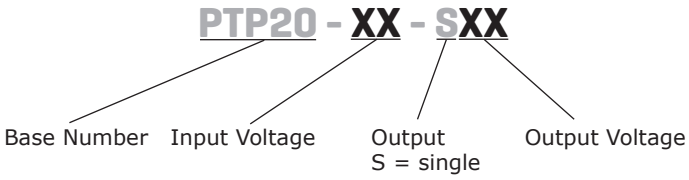

INPUT

parameter	conditions/description	min	typ	max	units
operating input voltage	12 Vdc input models 24 Vdc input models 48 Vdc input models	9 18 36	12 24 48	18 36 75	Vdc Vdc Vdc
current	12 Vdc input models, at no load 24 Vdc input models, at no load 48 Vdc input models, at no load		10 7 5		mA mA mA
leakage current				5	µA
under voltage lockout	12 Vdc input models 24 Vdc input models 48 Vdc input models		7.5 15 33		Vdc Vdc Vdc
surge voltage	at 1 second max 12 Vdc input models 24 Vdc input models 48 Vdc input models			 25 50 100	 Vdc Vdc Vdc
filter	pi filter				

OUTPUT

parameter	conditions/description	min	typ	max	units
capacitive load	5 Vdc output models 12 Vdc output models 15 Vdc output models 24 Vdc output models			6,800 1,200 800 300	µF µF µF µF
line regulation	input voltage from low to high, full load			±0.5	%
load regulation	0% to full load			±0.5	%
voltage accuracy				±1	%
start-up time	at nominal input, full load			25	ms
switching frequency	12 & 24 Vdc input models 48 Vdc input models		250 300		KHz KHz
transient recovery time	75%~100% load step change			500	µs

PROTECTIONS

parameter	conditions/description	min	typ	max	units
over current protection	hiccup		150		%
short circuit protection	auto recovery, continuous				

SAFETY AND COMPLIANCE

parameter	conditions/description	min	typ	max	units
isolation voltage		5,000 7,000			Vac Vdc
isolation capacitance	at 100kHz, 1V			100	pF
isolation resistance		10,000			MΩ
safety approvals	certified to 60601-1: IEC, EN				
EMI[4]	EN 55011 Class A				
ESD	EN 61000-4-2, Contact±8kV, Air±15kV, perf. Criteria A				
radiated immuninty	EN 61000-4-3, 10V/m, perf. Criteria A				
fast transient[5]	EN 61000-4-4, ±2kV, perf. Criteria A				
surge[5]	EN 61000-4-5, ±1kV, perf. Criteria A				
criteria immunity	EN 61000-4-6, 10Vrms, perf. Criteria A				
MTBF	as per MIL-HDBK-217F, at 25°C	1,060,000			hours
RoHS	yes				

Note: 4. EMI Class A without external circuit.
5. Test with E-CAP 220µF/100V at input terminal.

ENVIRONMENTAL

parameter	conditions/description	min	typ	max	units
operating temperature	see derating curve	-40		100	°C
storage temperature		-55		105	°C
maximum case temperature				110	°C

MECHANICAL

parameter	conditions/description	min	typ	max	units
dimensions	50.8 x 25.4 x 12.0				mm
weight			30		g
cooling method	natural convection				
case material	plastic case				

MECHANICAL DRAWING

units: mm
tolerance: ±0.25 mm

PIN CONNECTIONS	
PIN	Function
1	+Vin
2	-Vin
3	+Vout
4	no pin
5	-Vout

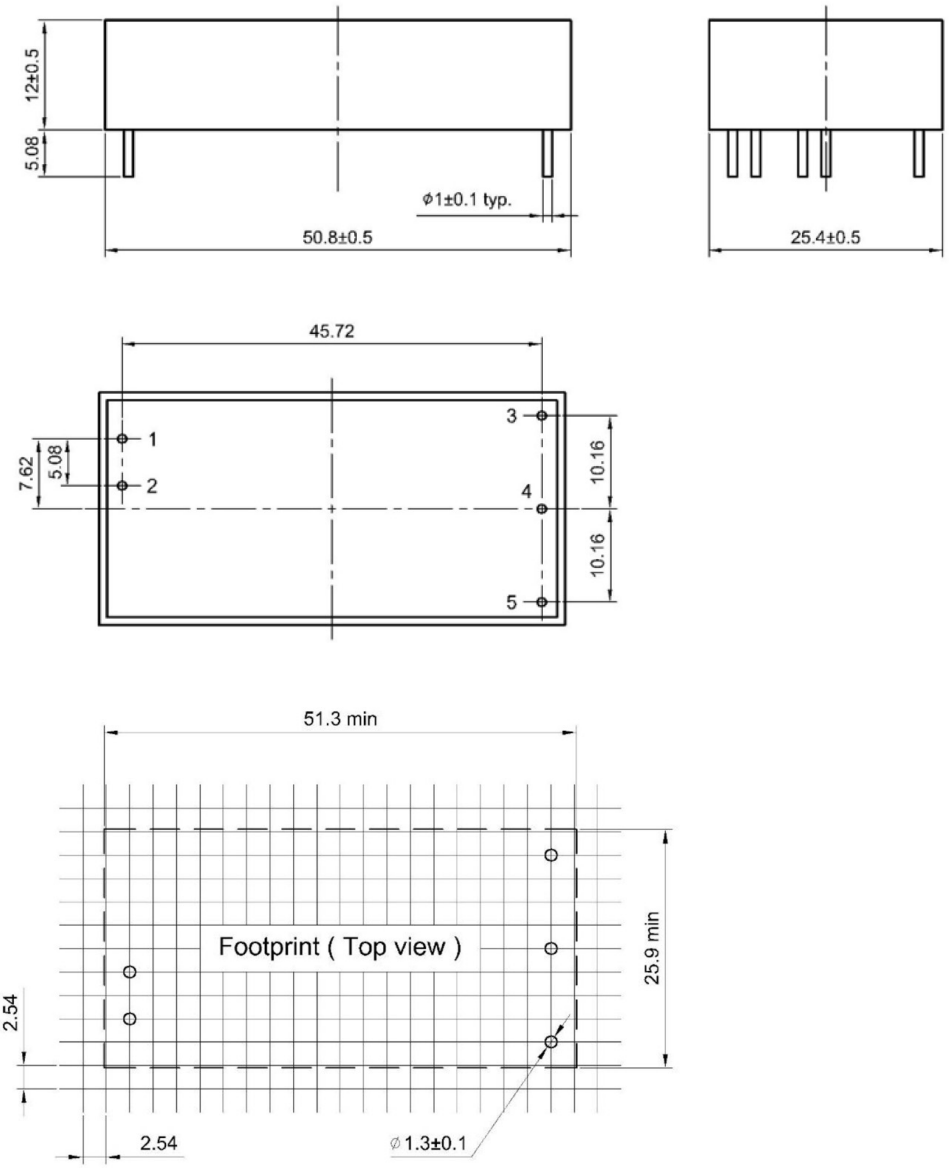

DERATING CURVES

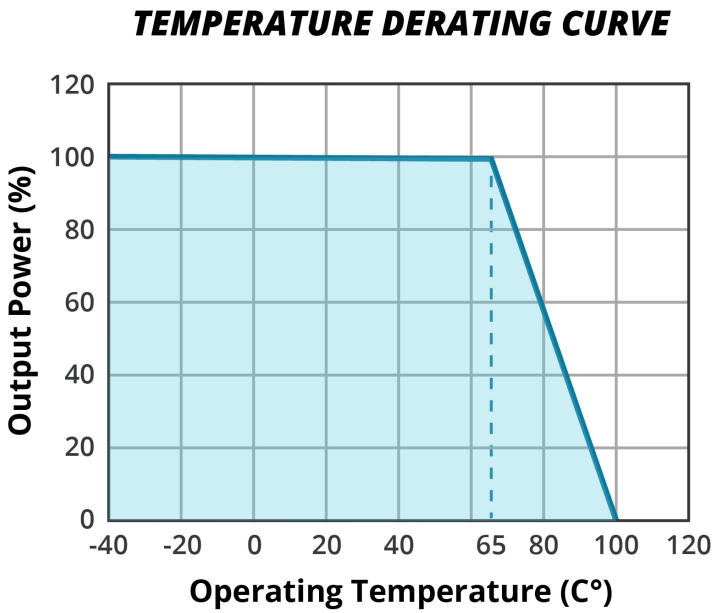

RIPPLE AND NOISE MEASURE

Figure 1

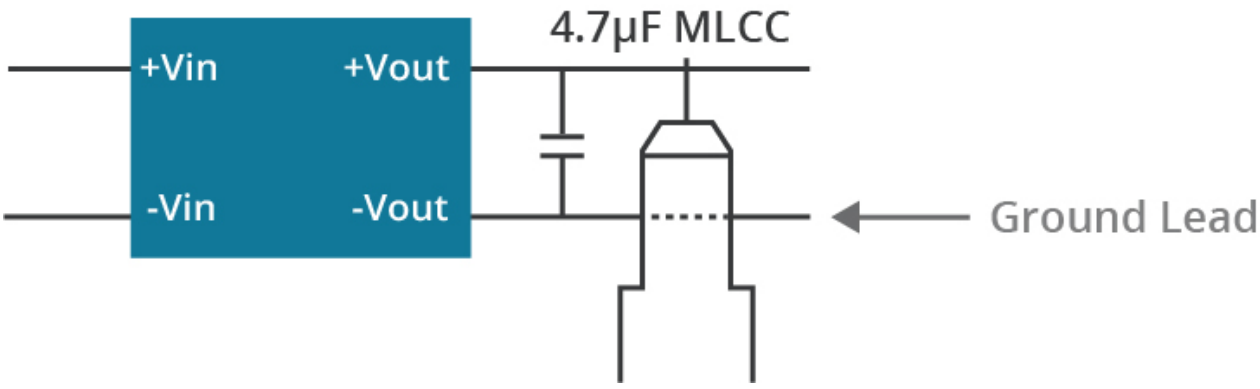

REVISION HISTORY

rev.	description	date
1.0	initial release	07/11/2024

The revision history provided is for informational purposes only and is believed to be accurate.

CUI INC
a bel group

Headquarters
15575 Sequoia Pkwy #100
Portland, OR 97224
800.275.4899

Fax 503.612.2383
cui.com
techsupport@cui.com

CUI offers a two (2) year limited warranty. Complete warranty information is listed on our website.

CUI reserves the right to make changes to the product at any time without notice. Information provided by CUI is believed to be accurate and reliable. However, no responsibility is assumed by CUI for its use, nor for any infringements of patents or other rights of third parties which may result from its use.

CUI products are not authorized or warranted for use as critical components in equipment that requires an extremely high level of reliability. A critical component is any component of a life support device or system whose failure to perform can be reasonably expected to cause the failure of the life support device or system, or to affect its safety or effectiveness.