CUI INC
a bel group

SERIES: PVC300 | DESCRIPTION: DC-DC CONVERTER

FEATURES

- 300 W isolated output
- industry standard half brick package
- 4:1 input range (9~36 Vdc)
- -40 ~ 105 °C operating temperature range
- 3,000 Vdc isolation
- over current, over temperature, over voltage, and short circuit protections
- baseplate cooling
- remote on/off control, output voltage trim
- certified to EN/IEC 62368-1

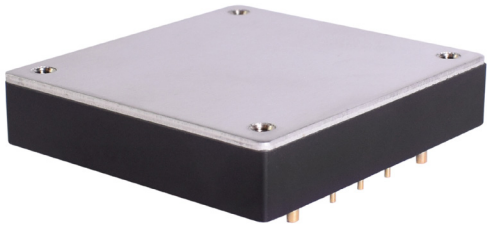

RoHS CE UKCA

MODEL

MODEL	input voltage typ (Vdc)	input voltage range (Vdc)	output voltage (Vdc)	output current max (A)	output power max (W)	ripple and noise[1] max (mVp-p)	efficiency[2] typ (%)
PVC300-24-S12	24	9~36	12	25.0	300	120	86.5
PVC300-24-S15	24	9~36	15	20.0	300	150	87
PVC300-24-S24	24	9~36	24	12.5	300	300	86
PVC300-24-S48	24	9~36	48	6.25	300	480	87

Notes:
1. Ripple & Noise measured with 20MHz bandwidth at nominal input voltage 0%~100% load with E-cap 47μF/100V +X7R MLCC 0.47μF/100V.
2. Efficiency is measured at nominal input voltage and full load at 25°C.
3. All specifications valid at nominal input voltage, full load and 25°C after warm-up time unless otherwise stated.

PART NUMBER KEY

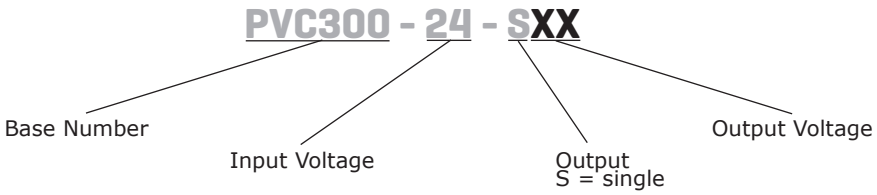

INPUT

parameter	conditions/description	min	typ	max	units
input voltage		9	24	36	Vdc
current (no load)	12, 15, 24 Vdc output models 48 Vdc output model		50 70		mA mA
under-voltage protection	0% to 100% load	7			Vdc
start-up voltage	0% to 100% load	9			Vdc
start-up time	at nominal input voltage, full load			200	ms
surge voltage	for maximum of 1 second		50		Vdc
CTRL	module ON: CTRL pin open or 3Vdc < Vr < 12Vdc module OFF: CTRL pin short < Vr < 1.2 Vdc				
filter	LC filter				

OUTPUT

parameter	conditions/description	min	typ	max	units
maximum capacitive load	12 & 15 Vdc output models 24 Vdc output model 48 Vdc output model			8,800 4,300 1,500	µF µF µF
line regulation	full load, input voltage from low to high		±0.2		%
load regulation	0% to 100% load		±0.5		%
voltage accuracy				±1	%
voltage adjustability	0% to 100% load at input range, output power less than max rated power 24 Vdc output model 12, 15 Vdc output models at input range 48 Vdc output model at input range		 ±10 ±10 -10/+15		 % % %
switching frequency	full load, nominal input voltage		250		kHz
transient recovery time	25% load step change, 75% to 100% load		500		µs
temperature coeffecient	full load		0.05		%/°C

PROTECTIONS

parameter	conditions/description	min	typ	max	units
over voltage protection	12 Vdc output models 15 Vdc output models 24 Vdc output model 48 Vdc output model	13.4 16.8 26.9 56.2		19.2 24.0 38.4 67.2	Vdc Vdc Vdc Vdc
over current protection			150		%
short circuit protection	auto recovery, continuous				
over temperature protection	case temperature			110	°C

SAFETY AND COMPLIANCE

parameter	conditions/description	min	typ	max	units
isolation voltage	input to output for 1 min, DC isolation 1 mA max input to output for 1 min, AC isolation 5 mA max	3,000 2,000			Vdc Vac
	input to case for 1 min, DC isolation 1 mA max input to case for 1 min, AC isolation 5 mA max	1,600 1,000			Vdc Vac
isolation capacitance				4,700	pF
safety approvals	certified to 62368-1: EN, IEC				
EMI	EN55032 Class A/B with external circuit				
ESD	EN61000-4-2, Air±8kV; Contact±6kV, perf. Criteria A				
radiated immunity	EN61000-4-3, 10 V/m, perf. Criteria A				
fast transient[4]	EN61000-4-4, ±2kV, perf. Criteria A				

SAFETY AND COMPLIANCE (CONTINUED)

parameter	conditions/description	min	typ	max	units
surge[4]	EN61000-4-5, ±2kV, perf. Criteria A				
conducted immunity	EN61000-4-6, 10Vrms, perf. Criteria A				
magnetic field immunity	EN61000-4-8, 10 A/m, perf. Criteria A				
MTBF	as per MIL-HDBK-217F at 25°C	600,000			hours
RoHS	yes				

Notes: 4. External input capacitor required 1000µF/100V.

ENVIRONMENTAL

parameter	conditions/description	min	typ	max	units
operating temperature	see derating curves	-40		105	°C
storage temperature		-55		125	°C
baseplate temperature				105	°C
operating humidity		5		95	%

MECHANICAL

parameter	conditions/description	min	typ	max	units
dimensions	57.9 x 61.0 x 12.7 [2.280 x 2.402 x 0.500 inch]				mm
weight			120		g
case material	aluminum baseplate with plastic case				
potting material	silicon				
cooling method	natural convection				

MECHANICAL DRAWING

units: mm
tolerance: ±0.25
pin 1,4,5,9: Ø2.0, ±0.1
pin 2,3,6,7,8: Ø1.0, ±0.1

PIN CONNECTIONS	
PIN	Function
1	+Vin
2	CTRL
3	Case
4	-Vin
5	-Vout
6	-Sense
7	Trim
8	+Sense
9	+Vout

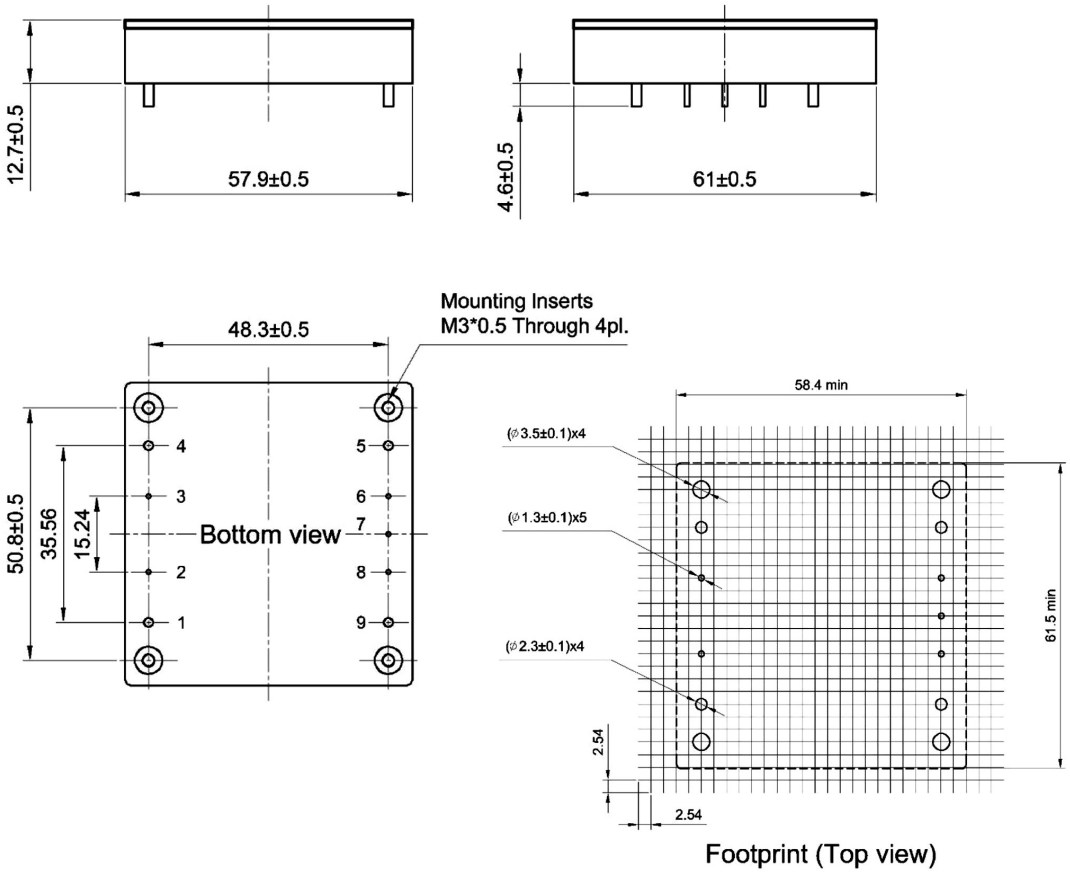

DERATING CURVE

TEMPERATURE DERATING CURVE
PVC300-24-S12

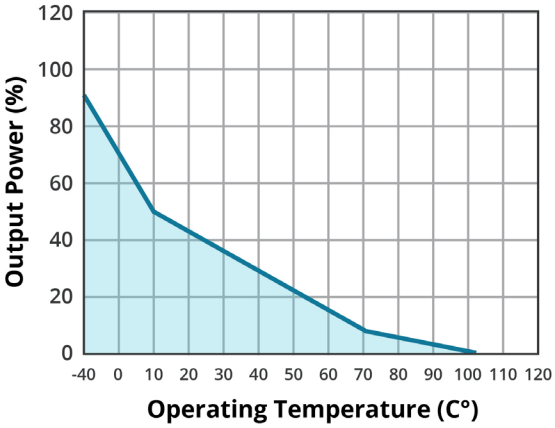

TEMPERATURE DERATING CURVE
PVC300-24-S15

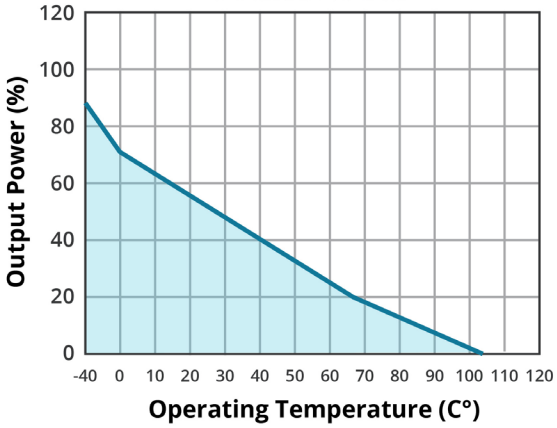

TEMPERATURE DERATING CURVE
PVC300-24-S24

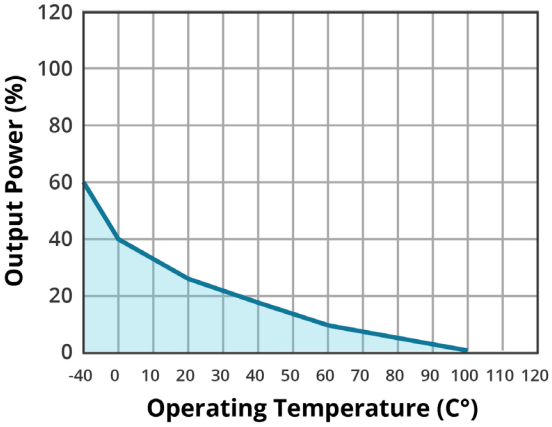

TEMPERATURE DERATING CURVE
PVC300-24-S48

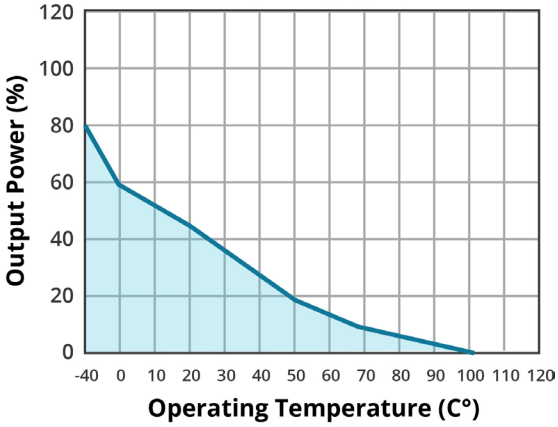

INPUT VOLTAGE VS OUTPUT LOAD
PVC300-24-S12

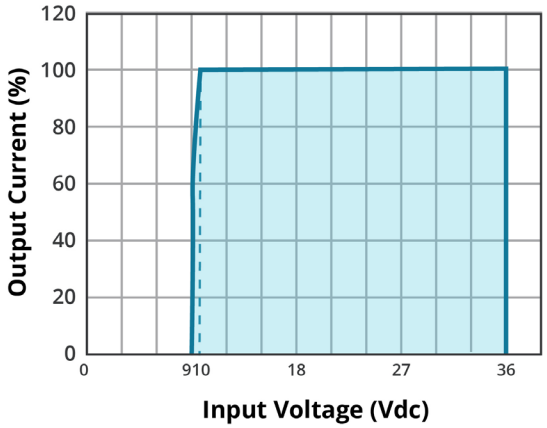

INPUT VOLTAGE VS OUTPUT LOAD
PVC300-24-S15

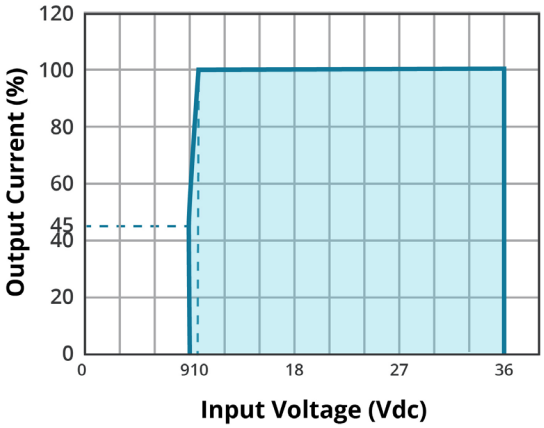

RIPPLE AND NOISE METHOD

Figure 1

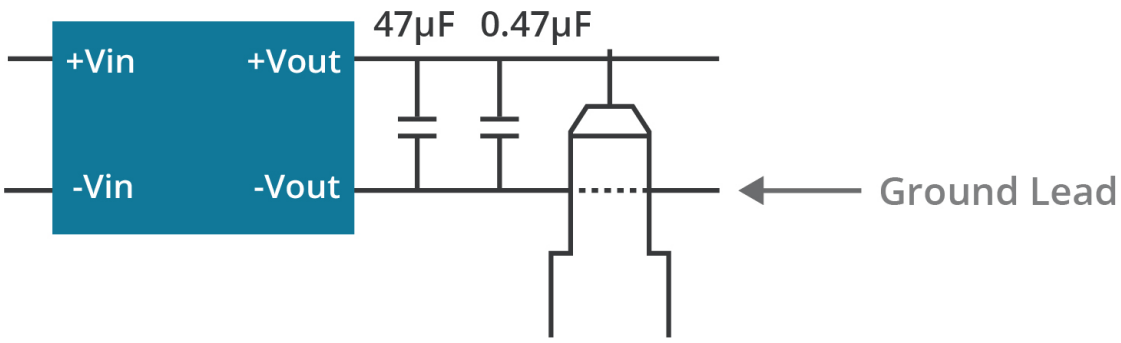

Note: Measured with 20MHz bandwidth and E-Cap 47µF/100V +X7R MLCC 0.47µF/100V.

REMOTE ON/OFF CONTROL

Figure 2

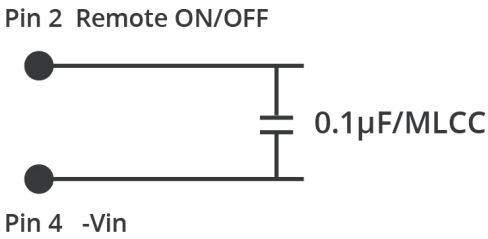

EMI CLASS A RECOMMENDED CIRCUIT

Figure 3
PVC300-24-S15 & PVC300-24-S48

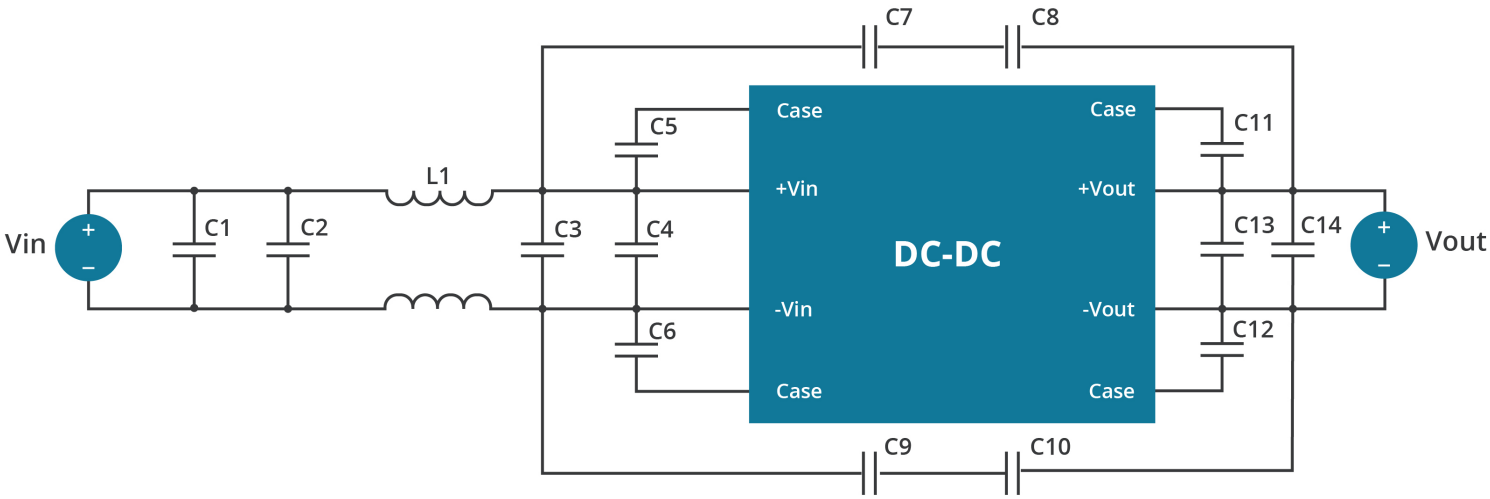

Table 1

EMI CLASS A - PVC300-24-S15							
C1	**C2**	**C3**	**C4**	**C5**	**C6**	**C7**	**C8**
KYA	MLCC	KYA	MLCC	MLCC	MLCC	MLCC	MLCC
220µF/100Vdc	1µF/50Vdc	220µF/100Vdc	1µF/50Vdc	4,700pF/2kVdc x4	4,700pF/2kVdc x4	4,700pF/2kVdc	4,700pF/2kVdc
C9	**C10**	**C11**	**C12**	**C13**	**C14**	**L1**	
MLCC	MLCC	MLCC	MLCC	MLCC	MLCC	A10 T22 X 14 X 10	
4,700pF/2kVdc	4,700pF/2kVdc	4,700pF/2kVdc x4	4,700pF/2kVdc x4	47µF/50Vdc	0.1µF/50Vdc	1.3mH	

Table 2

EMI CLASS A - PVC300-24-S48							
C1	**C2**	**C3**	**C4**	**C5**	**C6**	**C7**	**C8**
KYA	MLCC	KYA	MLCC	MLCC	MLCC	MLCC	MLCC
220µF/100Vdc	1µF/50Vdc	220µF/100Vdc	1µF/50Vdc	4,700pF/2kVdc x6	4,700pF/2kVdc x6	4,700pF/2kVdc	4,700pF/2kVdc
C9	**C10**	**C11**	**C12**	**C13**	**C14**	**L1**	
MLCC	MLCC	MLCC	MLCC	MLCC	MLCC	A10 T22 X 14 X 10	
4,700pF/2kVdc	4,700pF/2kVdc	4,700pF/2kVdc x6	4,700pF/2kVdc x6	4.7µF/50Vdc	0.1µF/100Vdc	1.3mH	

EMI CLASS A RECOMMENDED CIRCUIT (CONTINUED)

Figure 4
PVC300-24-S24

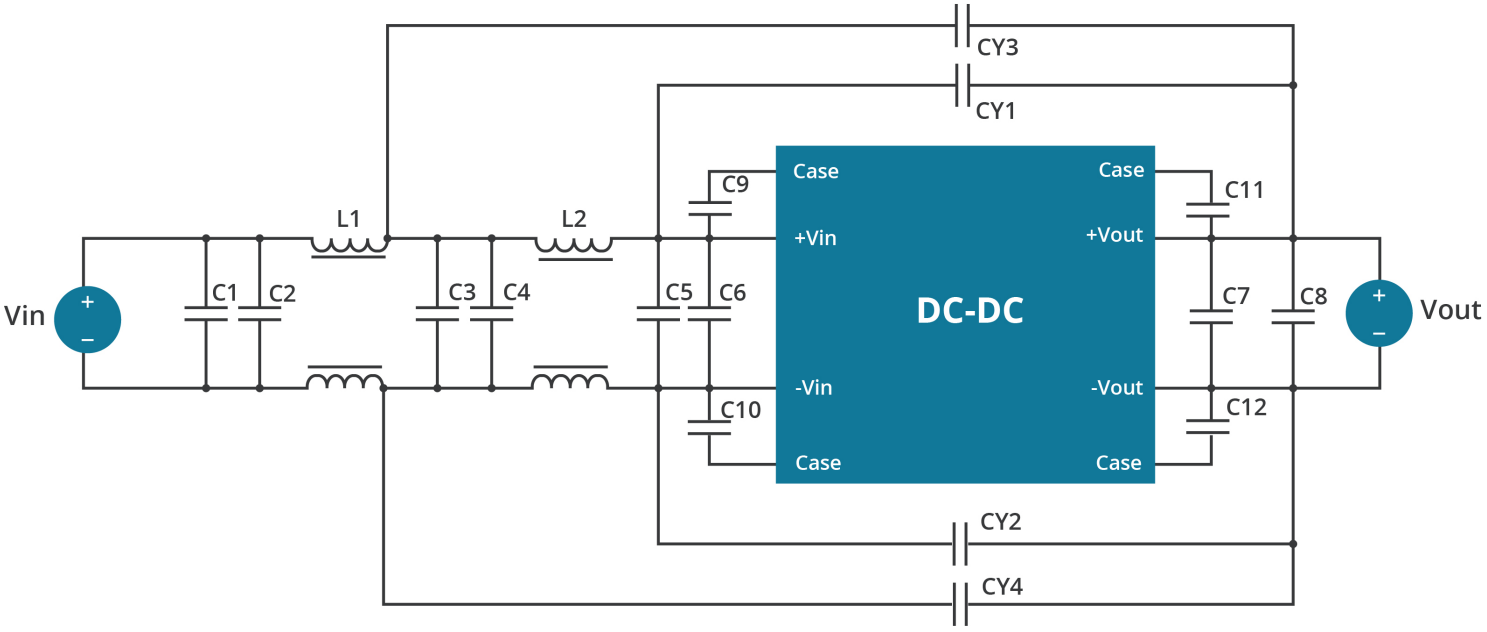

Table 3

EMI CLASS A - PVC300-24-S24								
C1	**C2**	**C3**	**C4**	**C5**	**C6**	**C7**	**C8**	**C9**
KYA	MLCC	KYA	MLCC	KYA	MLCC	MLCC	MLCC	MLCC
220µF/100Vdc	1µF/50Vdc	220µF/100Vdc	1µF/50Vdc	220µF/100Vdc	1µF/50Vdc	4.7µF/50Vdc	0.1µF/50Vdc	2,200pF/3kVdc
C10	**C11**	**C12**	**CY1**	**CY2**	**CY3**	**CY4**	**L1**	**L2**
MLCC	MLCC	MLCC	MLCC	MLCC	NC	NC	A10 T22 x 14 x 10	A10 T22 x 14 x 10
2,200pF/3kVdc	2,200pF/3kVdc	2,200pF/3kVdc	2,200pF/3kVdc x5 parallel	2,200pF/3kVdc x5 parallel			1.3mH	1.3mH

APPLICATION NOTES

Figure 5

Trim up

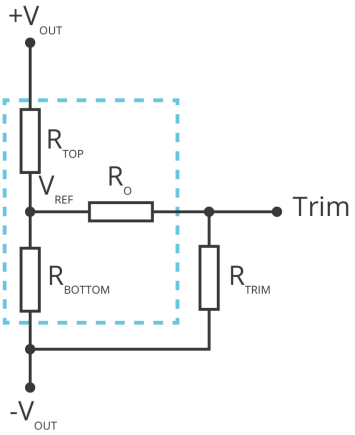

$$R_{TRIM} = \frac{a \cdot R_{BOTTOM}}{R_{BOTTOM} - a} - R_O \qquad a = \frac{V_{REF}}{V_{OUT} - V_{REF}} \cdot R_{TOP}$$

Formula for Trim up

Trim down

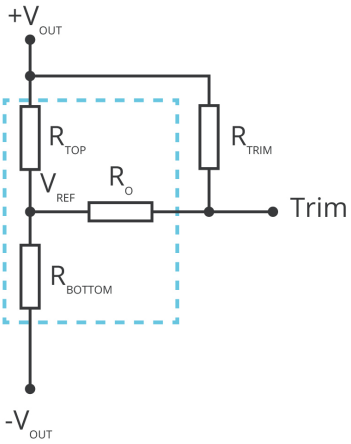

$$R_{TRIM} = \frac{a \cdot R_{TOP}}{R_{TOP} - a} - R_O \qquad a = \frac{V_{OUT} - V_{REF}}{V_{REF}} \cdot R_{BOTTOM}$$

Formula for Trim down

Table 4

V_{OUT}	R_{TOP}	R_{BOTTOM}	R_O	V_{REF}
(Vdc)	(kΩ)	(kΩ)	(kΩ)	(V)
12	38.0	10.0	68.0	2.50
15	50.0	10.0	68.0	2.50
24	103.0	5.6	51.0	1.24
48	36.4	2.0	12.4	2.50

Note: Value for R_{TOP}, R_{BOTTOM}, R_O, and V_{REF} refer to Table 4 (fixed internal values).
R_{TRIM}: Trim resistance
a: User-defined parameter, no actual meanings
V_{OUT}: Target output voltage

REVISION HISTORY

rev.	description	date
1.0	initial release	03/28/2024
1.01	derating curves updated	07/16/2024

The revision history provided is for informational purposes only and is believed to be accurate.

CUI INC
a bel group

Headquarters
15575 SW Sequoia Pkwy #100
Portland, OR 97224
800.275.4899

Fax 503.612.2383
cui.com
techsupport@cui.com

CUI offers a two (2) year limited warranty. Complete warranty information is listed on our website.

CUI reserves the right to make changes to the product at any time without notice. Information provided by CUI is believed to be accurate and reliable. However, no responsibility is assumed by CUI for its use, nor for any infringements of patents or other rights of third parties which may result from its use.

CUI products are not authorized or warranted for use as critical components in equipment that requires an extremely high level of reliability. A critical component is any component of a life support device or system whose failure to perform can be reasonably expected to cause the failure of the life support device or system, or to affect its safety or effectiveness.