CUI INC
a bel group

SERIES: V78E-500-SMT | DESCRIPTION: NON-ISOLATED DC SWITCHING REGULATOR

FEATURES

- 500 mA of output current
- efficiency up to 95%
- SMT package
- industrial operating temp -40~+85°C
- industry standard footprint
- no load input current of 0.2 mA
- output short circuit protection on output

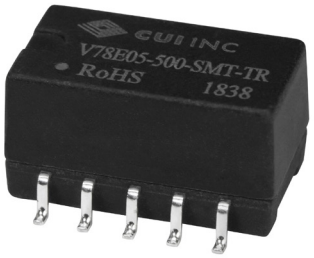

RoHS

MODEL

MODEL	input voltage[1] typ (Vdc)	input voltage[1] range (Vdc)	output voltage (Vdc)	output current max (mA)	output power max (W)	ripple & noise[2] max (mVp-p)	efficiency[3] typ (%)
V78E01-500-SMT	12	4.75~28	1.5	500	0.75	50	76
V78E02-500-SMT	12	4.75~32	2.5	500	1.25	50	81
V78E03-500-SMT	24	4.75~36	3.3	500	1.65	50	86
V78E05-500-SMT	24	6.5~36	5	500	2.5	50	90
V78E06-500-SMT	24	8~36	6.5	500	3.25	50	92
V78E09-500-SMT	24	12~36	9	500	4.5	50	93
V78E12-500-SMT	24	15~36	12	500	6	50	94
V78E15-500-SMT	24	19~36	15	500	7.5	50	95

Notes:
1. For input voltages higher than 30 Vdc, a 22 µF / 50 V input capacitor is required.
2. Tested at nominal input, 20 MHz bandwidth, with 10 µF electrolytic and 1 µF ceramic capacitor on the output. For 1.5~3.3 Vdc output models, tested at 20~100% load. For all other models, tested at 10~100% load. At loads below 20% for 1.5~3.3 Vdc output models, the max ripple and noise will be 100 mVp-p. At loads below 10% for all other models, the max ripple and noise will be 150 mVp-p.
3. Measured at min Vin, full load.
4. All specifications are measured at Ta=25°C, humidity < 75%, nominal input voltage, and rated output load unless otherwise specified.

PART NUMBER KEY

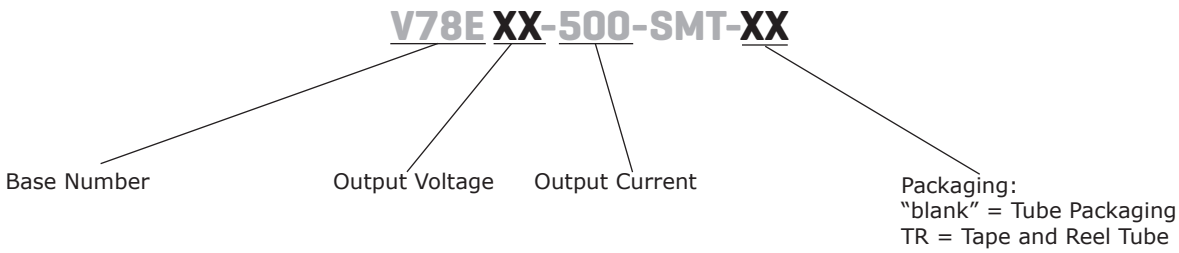

INPUT

parameter	conditions/description	min	typ	max	units
operating input voltage[5]		4.75		36	Vdc
filter	capacitor filter				
input reverse polartiy protection	no				
no-load input current			0.2	1.5	mA
remote on/off[6]	turn on (3.2~8 Vdc or open circuit) turn off (<0.8 Vdc) input current when switched off		 0.03	 0.1	 mA

Note: 5. See Model section on page 1 for specific input voltage ranges.
6. The voltage of remote ON/OFF pin is relative to GND pin.

OUTPUT

parameter	conditions/description	min	typ	max	units
maximum capacitive load[7]				680	µF
voltage accuracy	at full load, input voltage range 1.5, 2.5, 3.3 Vdc output models all other models		 ±2 ±2	 ±4 ±3	 % %
line regulation	at full load, input voltage range		±0.2	±0.4	%
load regulation	at 10~100 % load, input voltage range 1.5, 2.5 Vdc output models all other models			 ±1 ±0.6	 % %
voltage adjustment	input voltage range		±10		%Vo
switching frequency	at full load, input voltage range 1.5 Vdc output model all other models		 370 700		 kHz kHz
transient recovery time	at nominal input voltage, 25% load step change		0.2	1	ms
transient response deviation	at nominal input voltage, 25% load step change		50	200	mV
temperature coefficient	operating temperature -40 °C to +85 °C			±0.03	%/°C

Note: 7. The maximum capacitive load was tested at nominal input voltage, full load.

PROTECTIONS

parameter	conditions/description	min	typ	max	units
short circuit protection	continuous, auto recovery				

SAFETY AND COMPLIANCE

parameter	conditions/description	min	typ	max	units
safety approvals	designed to meet 62368: EN, BS EN				
conducted emissions	CISPR32/EN55032, class B (external circuit required, see Figure 3-b)				
radiated emissions	CISPR32/EN55032, class B (external circuit required, see Figure 3-b)				
ESD	IEC/EN61000-4-2, contact ± 4kV, class B				
radiated immunity	IEC/EN61000-4-3, 10V/m, class A				
EFT/burst	IEC/EN61000-4-4, ± 1kV, class B (external circuit required, see Figure 3-a)				
surge	IEC/EN61000-4-5, line-line ± 1kV, class B (external circuit required, see Figure 3-a)				
conducted immunity	IEC/EN61000-4-6, 3 Vr.m.s, class A				
MTBF	as per MIL-HDBK-217F, 25°C	2,000,000			hours
RoHS	yes				

ENVIRONMENTAL

parameter	conditions/description	min	typ	max	units
operating temperature	see derating curve	-40		85	°C
storage temperature		-55		125	°C
storage humidity	non-condensing			95	%

SOLDERABILITY

parameter	conditions/description	min	typ	max	units
reflow soldering	see reflow profile, refer to IPC/JEDEC J-STD-020D.1			245	°C

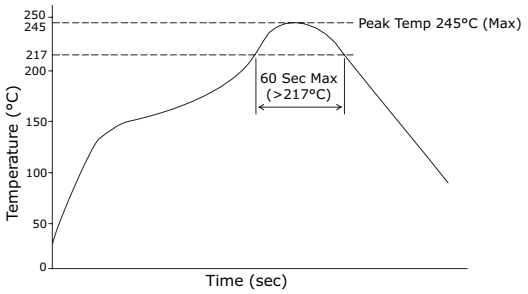

MECHANICAL

parameter	conditions/description	min	typ	max	units
dimensions	15.24 x 8.50 x 8.25 [0.60 x 0.335 x 0.325 inch]				mm
case material	black flame-retardant and heat resistant plastic (UL94V-0)				
weight			1.5		g

MECHANICAL DRAWING

units: mm [inch]
tolerance: ±0.50[±0.020]
pin section tolerance: ±0.10[±0.004]

PIN CONNECTIONS	
PIN	FUNCTION
1	+VIN
2	+VIN
3	GND
4	+VOUT
5	+VOUT
6	V adj
7	GND
10	remote on/off

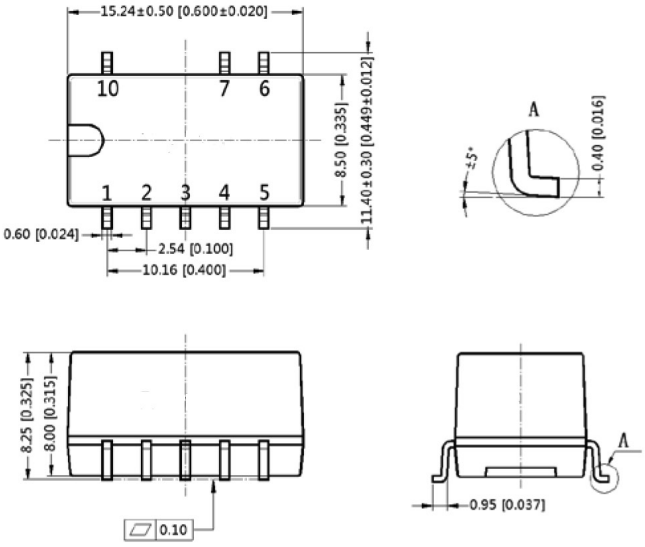

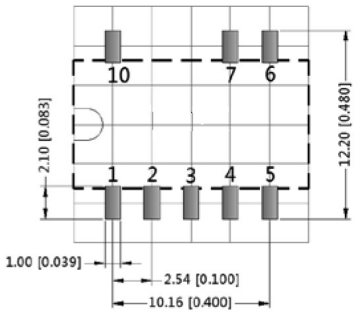

Note: Grid 2.54*2.54mm
Recommended PCB Layout
Top View

DERATING CURVE

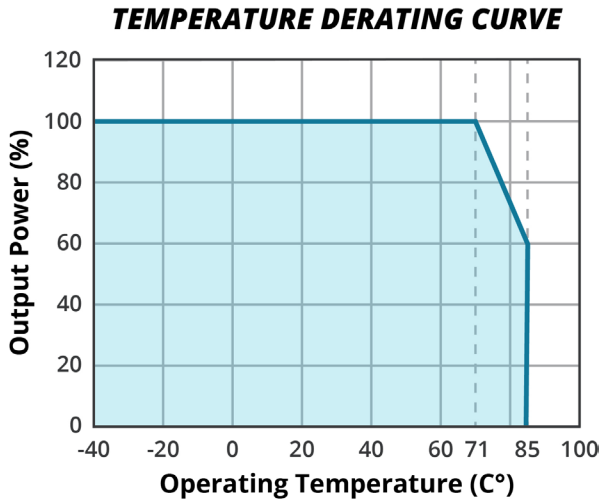

EFFICIENCY CURVES

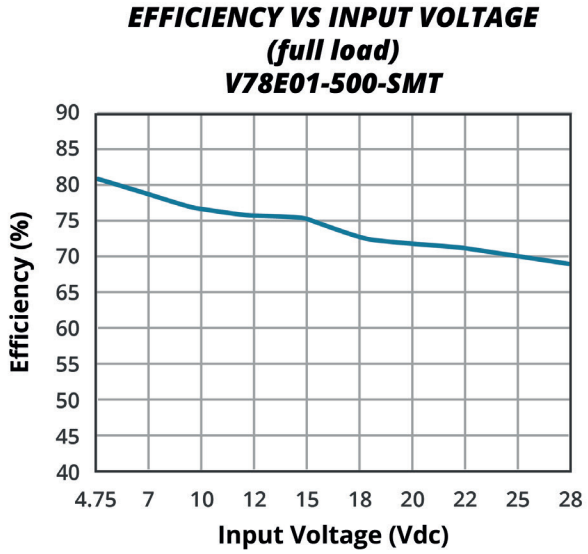

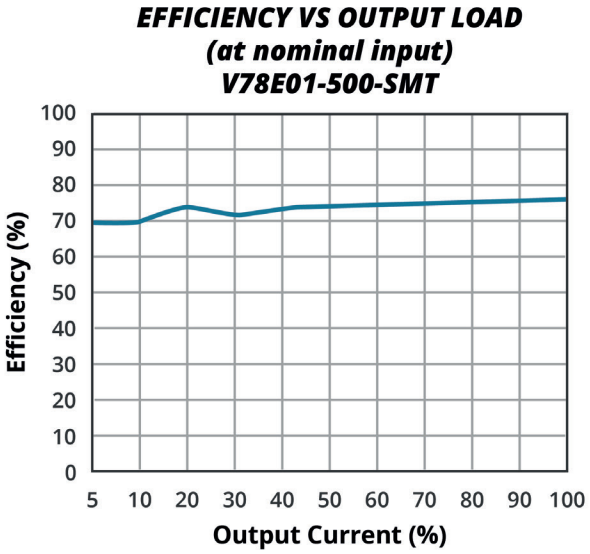

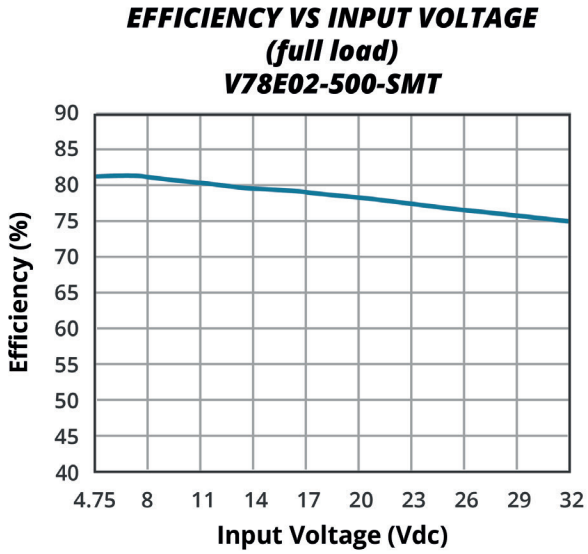

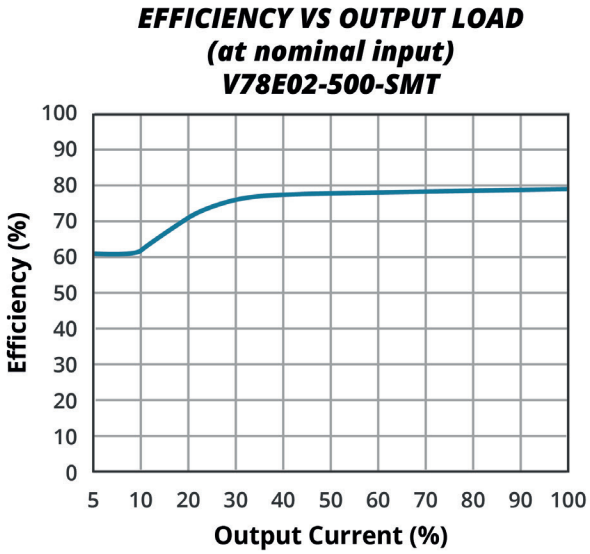

EFFICIENCY CURVES (CONTINUED)

EFFICIENCY VS INPUT VOLTAGE (full load) V78E03-500-SMT

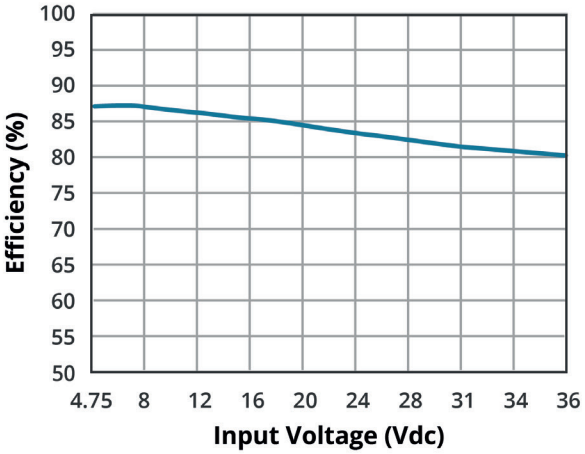

EFFICIENCY VS OUTPUT LOAD (at nominal input) V78E03-500-SMT

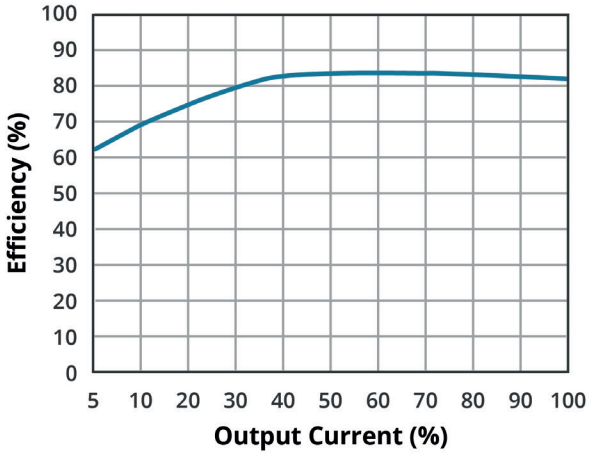

EFFICIENCY VS INPUT VOLTAGE (full load) V78E05-500-SMT

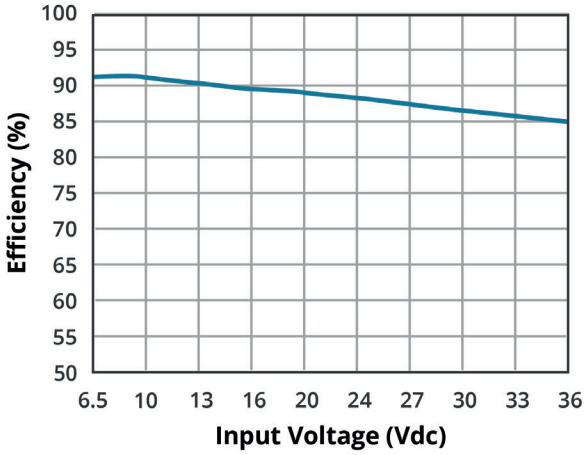

EFFICIENCY VS OUTPUT LOAD (at nominal input) V78E05-500-SMT

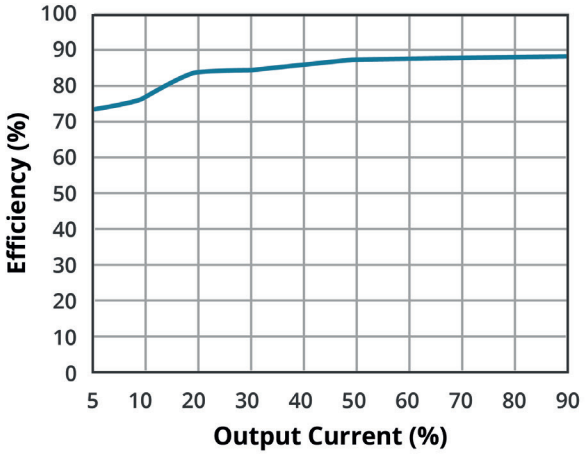

EFFICIENCY VS INPUT VOLTAGE (full load) V78E06-500-SMT

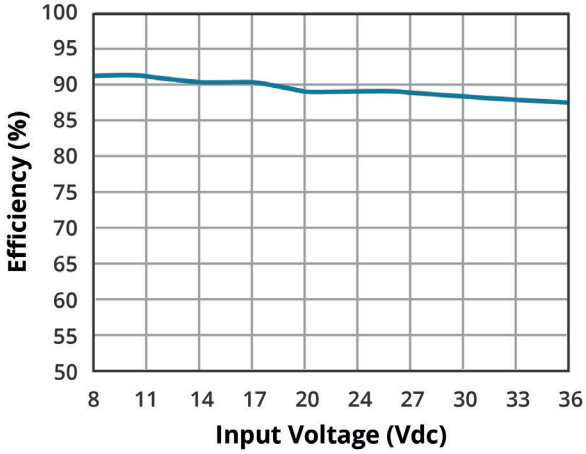

EFFICIENCY VS OUTPUT LOAD (at nominal input) V78E06-500-SMT

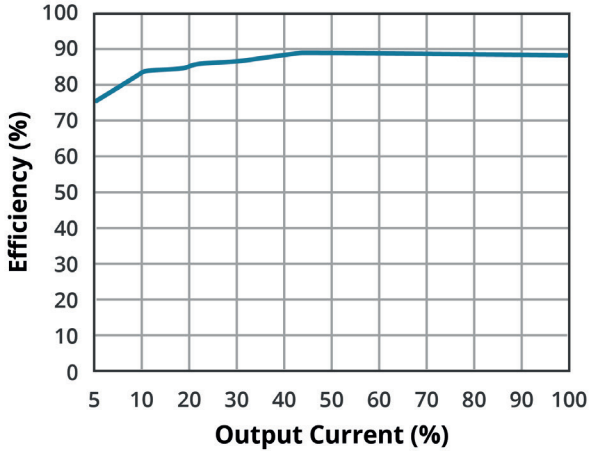

EFFICIENCY CURVES (CONTINUED)

EFFICIENCY VS INPUT VOLTAGE (full load) V78E09-500-SMT

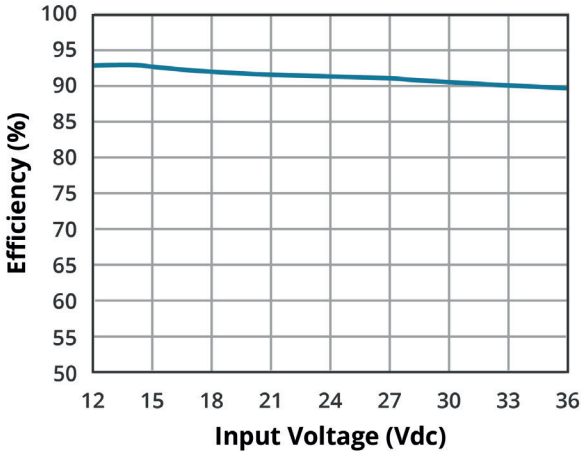

EFFICIENCY VS OUTPUT LOAD (at nominal input) V78E09-500-SMT

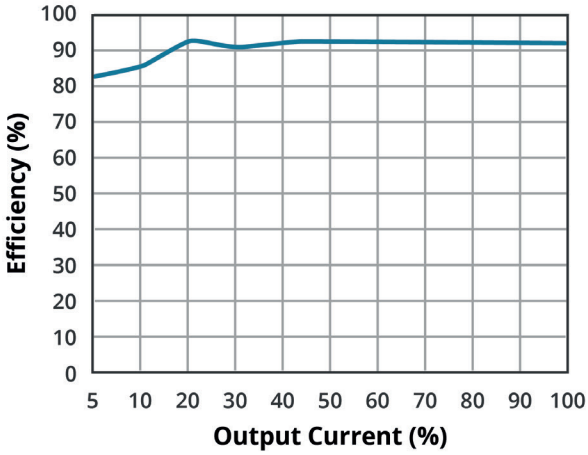

EFFICIENCY VS INPUT VOLTAGE (full load) V78E12-500-SMT

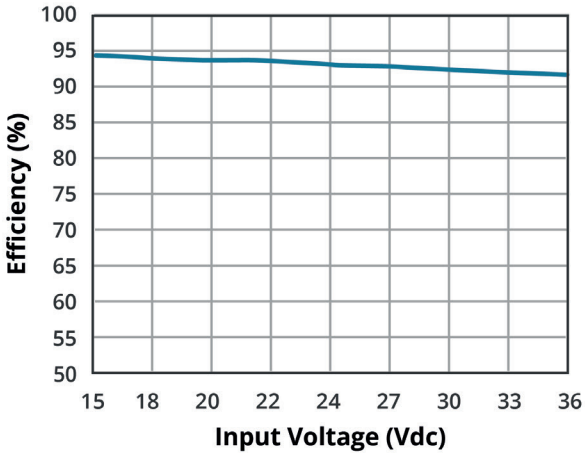

EFFICIENCY VS OUTPUT LOAD (at nominal input) V78E12-500-SMT

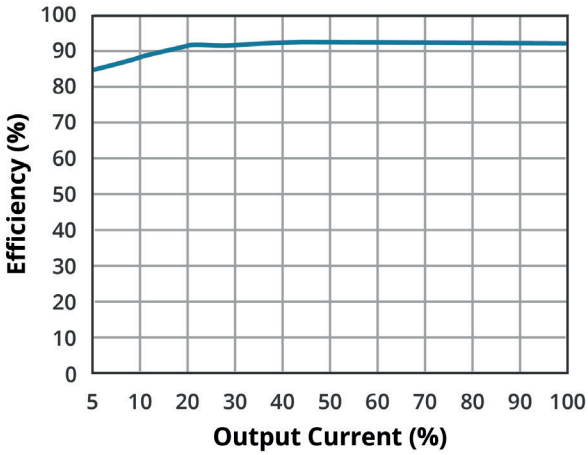

EFFICIENCY VS INPUT VOLTAGE (full load) V78E15-500-SMT

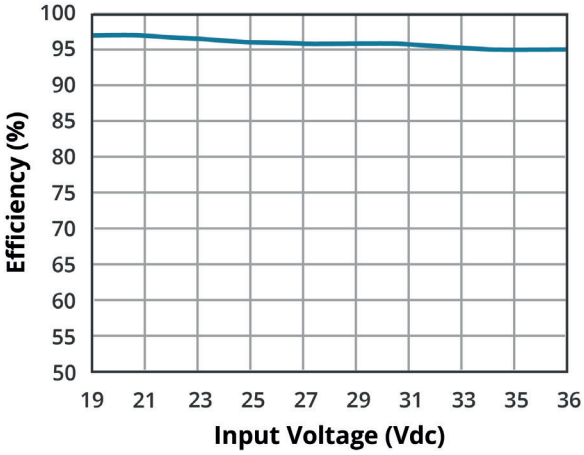

EFFICIENCY VS OUTPUT LOAD (at nominal input) V78E15-500-SMT

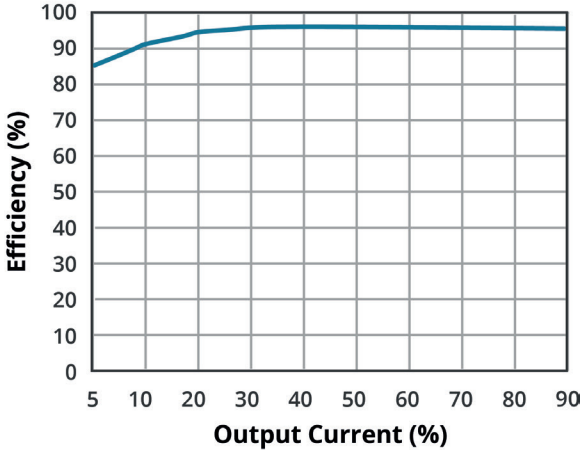

TYPICAL APPLICATION CIRCUIT

Figure 1
Application Circuit

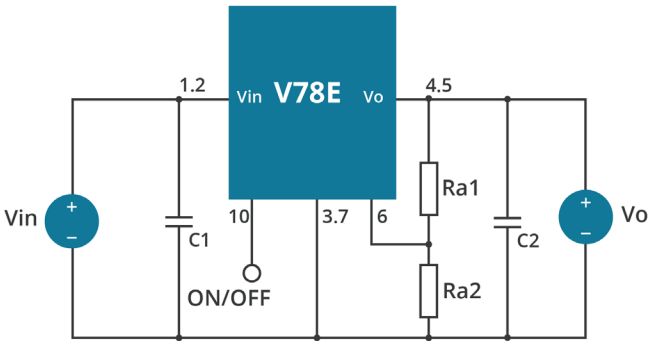

Figure 2
LC Filter Application Circuit

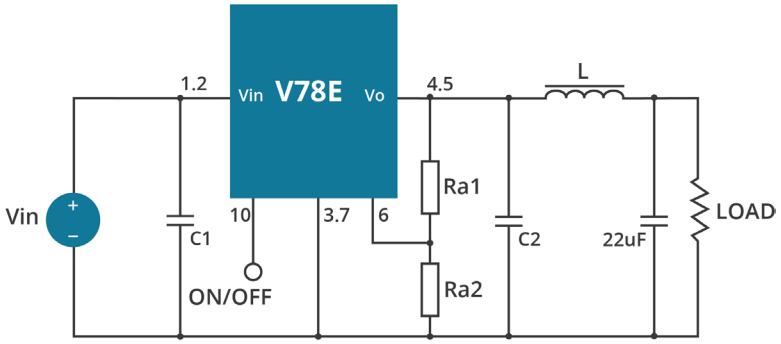

Table 1

Model Number	C1 (ceramic capacitor)	C2 (ceramic capacitor)	Ra1/Ra2 (Vadj resistance)
V78E01-500-SMT	10 µF/50 V	22 µF/10 V	refer to Vadj resistance calculation
V78E02-500-SMT	10 µF/50 V	22 µF/10 V	
V78E03-500-SMT	10 µF/50 V	22 µF/10 V	
V78E05-500-SMT	10 µF/50 V	22 µF/16 V	
V78E06-500-SMT	10 µF/50 V	22 µF/16 V	
V78E09-500-SMT	10 µF/50 V	22 µF/25 V	
V78E12-500-SMT	10 µF/50 V	22 µF/25 V	
V78E15-500-SMT	10 µF/50 V	22 µF/25 V	

EMC RECOMMENDED CIRCUIT

Figure 3

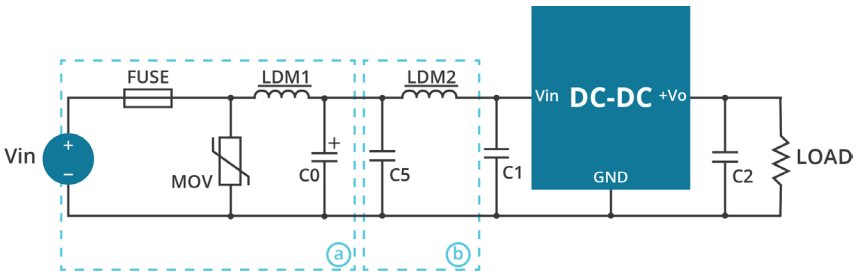

Table 2

Recommended external circuit components	
FUSE	choose according to actual input current
MOV	S20K30
LDM1	82 µH
C0	680 µF/50 V
C1, C2	refer to table 1
C5	4.7 µF/50 V
LDM2	12 µH

Note:
8. C1 & C2 are required and should be connected as close to the module pins as possible.
9. C1 & C2 can be increased as needed and the use of tantalum or low ESR electrolytic capacitors would be recommended.
10. To reduce the output ripple further, it is recommended to add an "LC" filter at the output (see figure 2) with a 10~47 µH L component.

APPLICATION NOTES

Output voltage trimming
Leave open if not used.

Figure 4

Trim up

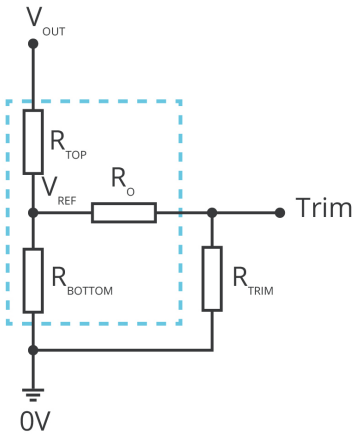

$$R_{TRIM} = \frac{a \cdot R_{BOTTOM}}{R_{BOTTOM} - a} - R_O \qquad a = \frac{V_{REF}}{V_{OUT} - V_{REF}} \cdot R_{TOP}$$

Formula for Trim up

Trim down

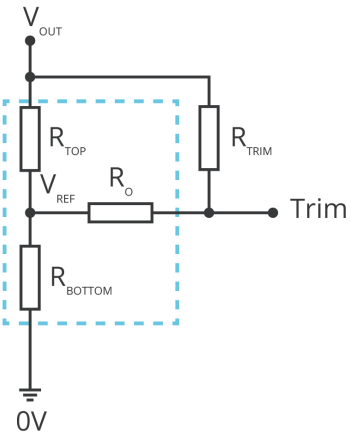

$$R_{TRIM} = \frac{a \cdot R_{TOP}}{R_{TOP} - a} - R_O \qquad a = \frac{V_{OUT} - V_{REF}}{V_{REF}} \cdot R_{BOTTOM}$$

Formula for Trim down

Table 3

V_{NOM} (Vdc)	R_{TOP} (kΩ)	R_{BOTTOM} (kΩ)	R_O (kΩ)	V_{REF} (V)
1.5[11]	7.5	7.5	15	0.75
2.5	27	11.858	51	0.765
3.3	33	9.9	47	0.765
5	75	13.5	75	0.765
6.5	75	10	51	0.765
9	75	4.7	27	0.765
12	51	5.1	27	0.765
15	82	4.423	27	2.0.765

Note: 11. The 1.5 Vdc output model can only be adjusted up.

Note: Value for R_{TOP}, R_{BOTTOM}, R_O, and V_{REF} refer to Table 3
R_{TRIM}: Trim Resistor
a: User-defined parameter, no actual meanings
V_{OUT}: The trim up/down voltage

REVISION HISTORY

rev.	description	date
1.0	initial release	09/12/2018
1.01	features and safety line updated, packaging removed	01/14/2021
1.02	product image updated	05/19/2021
1.03	updated derating and efficiency curves and circuit figures	06/09/2021
1.04	PN key updated	03/02/2022
1.05	safeties updated	07/25/2022
1.06	output voltage trimming updated	06/07/2023

The revision history provided is for informational purposes only and is believed to be accurate.

CUI INC
a bel group

Headquarters
20050 SW 112th Ave.
Tualatin, OR 97062
800.275.4899

Fax 503.612.2383
cui.com
techsupport@cui.com

CUI offers a two (2) year limited warranty. Complete warranty information is listed on our website.

CUI reserves the right to make changes to the product at any time without notice. Information provided by CUI is believed to be accurate and reliable. However, no responsibility is assumed by CUI for its use, nor for any infringements of patents or other rights of third parties which may result from its use.

CUI products are not authorized or warranted for use as critical components in equipment that requires an extremely high level of reliability. A critical component is any component of a life support device or system whose failure to perform can be reasonably expected to cause the failure of the life support device or system, or to affect its safety or effectiveness.