CUI INC
a bel group

SERIES: VFB400W | DESCRIPTION: DC-DC CONVERTER

FEATURES

- 400 W isolated output
- industry standard full brick package
- 4:1 input range (9~36, 18~75 Vdc)
- single regulated outputs from 5Vdc to 48 Vdc
- 1,500 Vdc isolation
- over current protection, over voltage protection, input under voltage lockout protection, and over temp. protection
- remote on/off
- without tantalum capacitors inside
- efficiency up to 90%

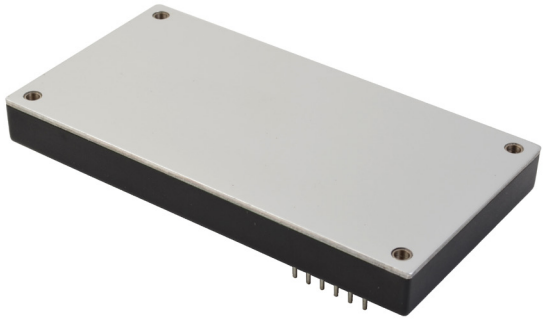

MODEL

	input voltage		output voltage	output current	output power	ripple and noise[1]	efficiency
	typ (Vdc)	range (Vdc)	(Vdc)	max (A)	max (W)	max (mVp-p)	typ (%)
VFB400W-Q24-S5	24	9~36	5	80	400	100	87.5
VFB400W-Q24-S12	24	9~36	12	33.3	400	120	86
VFB400W-Q24-S24	24	9~36	24	16.7	400	240	87
VFB400W-Q24-S28	24	9~36	28	14.3	400	280	87
VFB400W-Q24-S48	24	9~36	48	8.3	400	480	86.5
VFB400W-Q48-S5	48	18~75	5	80	400	100	89
VFB400W-Q48-S12	48	18~75	12	33.3	400	120	88.5
VFB400W-Q48-S24	48	18~75	24	16.7	400	240	90
VFB400W-Q48-S28	48	18~75	28	14.3	400	280	90
VFB400W-Q48-S48	48	18~75	48	8.3	400	480	89.5

Notes:
1. Ripple and noise measured at full load, 20 MHz BW with 10µF tantalum capacitor and 1µF ceramic capacitor across output. The 48 Vdc output models require a 10µF aluminum capacitor and 1µF ceramic capacitor across the output
2. An external input capacitor of 1000µF for 24 Vdc input models and 330µF for 48 Vdc input models is recommended to reduce input ripple voltage.

PART NUMBER KEY

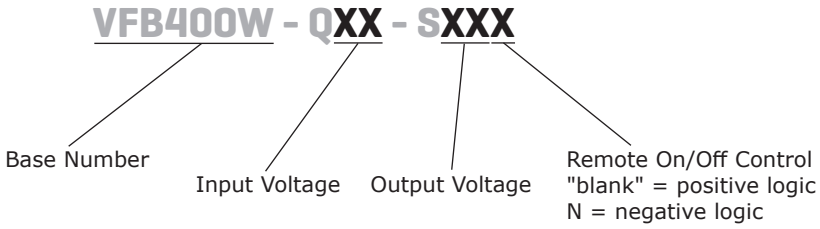

INPUT

parameter	conditions/description		min	typ	max	units
operating input voltage	24 Vdc input models 48 Vdc input models		9 18	24 48	36 75	Vdc Vdc
under voltage shutdown	24 Vdc input	power up power down		8.5 7.5		Vdc Vdc
	48 Vdc input	power up power down		17 15		Vdc Vdc
over voltage shutdown	24 Vdc input	power up power down		40 42		Vdc Vdc
	48 Vdc input	power up power down		80 83		Vdc Vdc
start-up time					250	ms
CTRL	positive logic	models ON (0~0.01 mA)				
		models OFF (1.0~10 mA)				
	negative logic	models ON (1.0~10 mA)				
		models OFF (0~0.01 mA)				
filter	pi filter					
input fuse	80A time delay fuse for 24 Vin models, 40A time delay fuse for 48 Vin models					

OUTPUT

parameter	conditions/description	min	typ	max	units
output capacitance[1]	5V output models 12V output models 24V and 28V output models 48V output models	680 330 330 100		10,000 10,000 4,700 2,200	µF µF µF µF
line regulation[1]	from low line to high line			±0.2	%
load regulation[1]	from full load to no load			±0.5	%
voltage accuracy[1]				±1.5	%
load share accuracy[2]	from 50~100% load		±10		%
adjustability		80		110	%
switching frequency			230		KHz
transient response	25% load step change			500	µs
temperature coefficient				±0.03	%/°C
power good (IOG)	Vout ready: low level, sink current Vout not ready: open drain output, applied voltage			20 50	mA V
auxiliary output voltage/current	10 ±3 Vdc, 20 mA max.				

Note: 1. Minimum capacitor values are required on the output to maintain the specified regulation.
2. Excludes 5 Vdc output models.

PROTECTIONS

parameter	conditions/description	min	typ	max	units
short circuit protection	continuous				
over current protection		110		150	%
over voltage protection		115		140	%
over temperature protection	shutdown		110		°C

SAFETY AND COMPLIANCE

parameter	conditions/description	min	typ	max	units
isolation voltage	for 1 minute, input to output, input to case, or output to case	1,500			Vdc
isolation resistance		10			MΩ
safety approvals	UL 60950				
MTBF	at full load, 25 °C, as per MIL-HDBK-217F	340,000			hours
RoHS	2011/65/EU (CE)				

ENVIRONMENTAL

parameter	conditions/description	min	typ	max	units
operating case temperature	see derating curve	-40		100	°C
storage temperature		-55		110	°C
humidity	non-condensing			95	%

SOLDERABILITY

parameter	conditions/description	min	typ	max	units
wave soldering	see wave soldering profile			260	°C

Notes:
1. Soldering materials: Sn/Cu/Ni
2. Ramp up rate during preheat: 1.4°C/s (from 50°C to 100°C)
3. Soaking temperature: 0.5°C/s (from 100°C to 130°C), 60±20 seconds
4. Peak temperature: 260°C, above 250°C for 3~6 seconds
5. Ramp down rate during cooling: -10°C/s (from 260°C to 150°C)

WAVE SOLDERING PROFILE

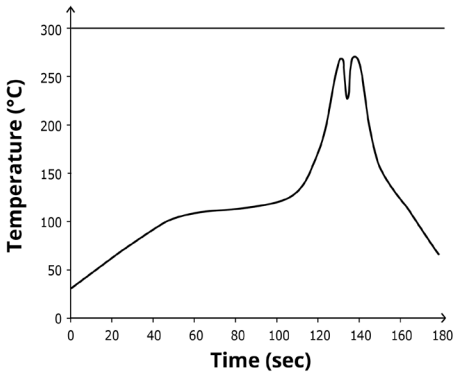

MECHANICAL

parameter	conditions/description	min	typ	max	units
dimensions	4.60 x 2.40 x 0.50 (116.8 x 61.0 x 12.7 mm)				inch
case material	aluminum baseplate with plastic case				
weight			220		g

MECHANICAL DRAWING

units: inch[mm]
tolerance: X.XX = ±0.02[±0.5]
X.XXX = ±0.010[±0.25]

pin diameter tolerance: ±0.004[±0.1]

PIN CONNECTIONS	
Pin	Function
1	-Vin
2	+Vin
3	-ON/OFF
4	+ON/OFF
5	+Vo
6	+Vo
7	+Vo
8	-Vo
9	-Vo
10	-Vo
11	-S
12	+S
13	TRIM
14	PC/NC
15	IOG
16	AUX

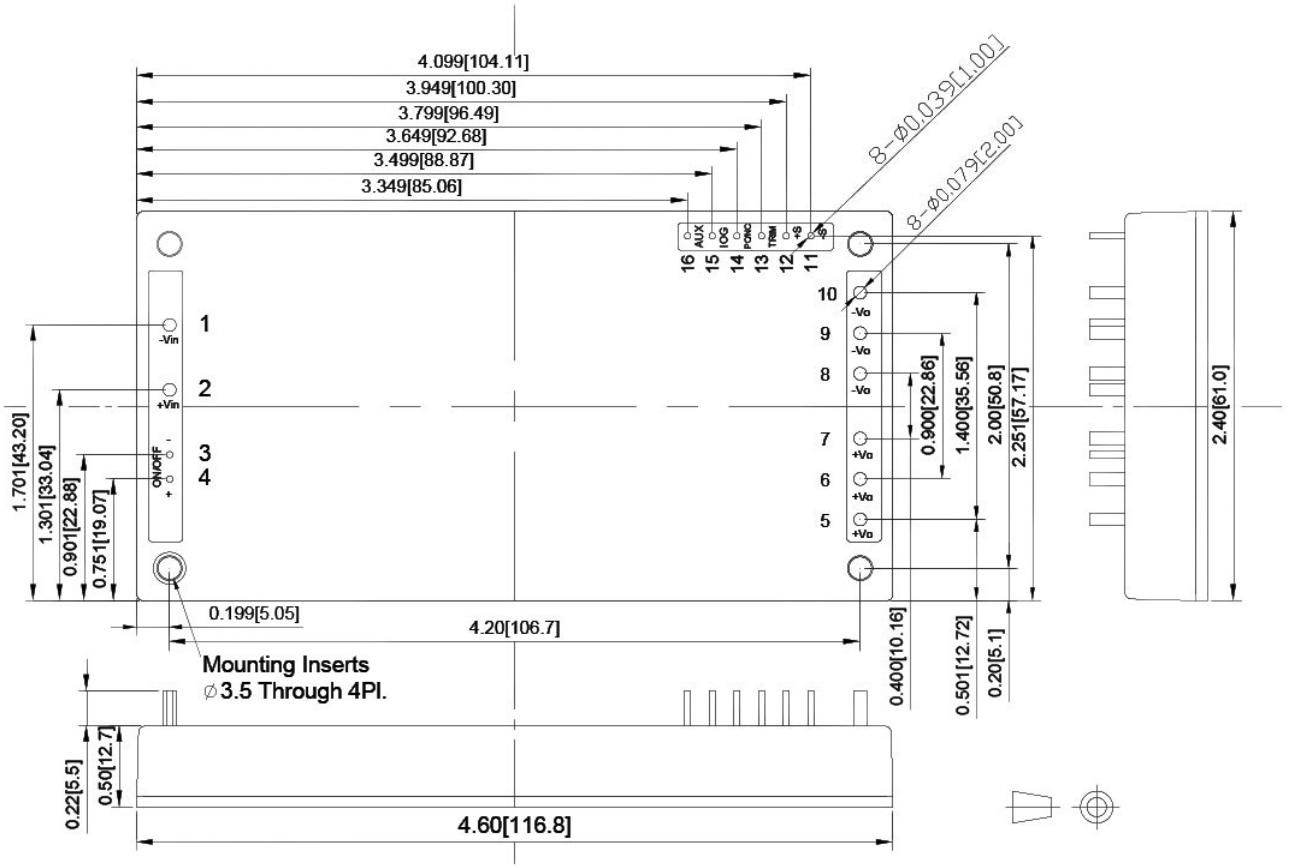

DERATING CURVES

TEMPERATURE DERATING CURVE VFB400W-Q24-S5

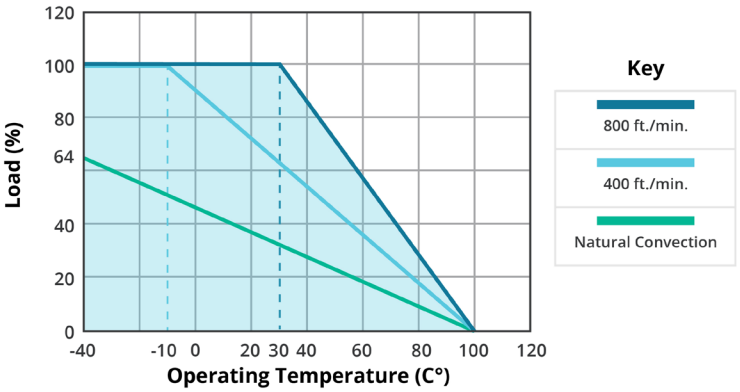

TEMPERATURE DERATING CURVE VFB400W-Q24-S12

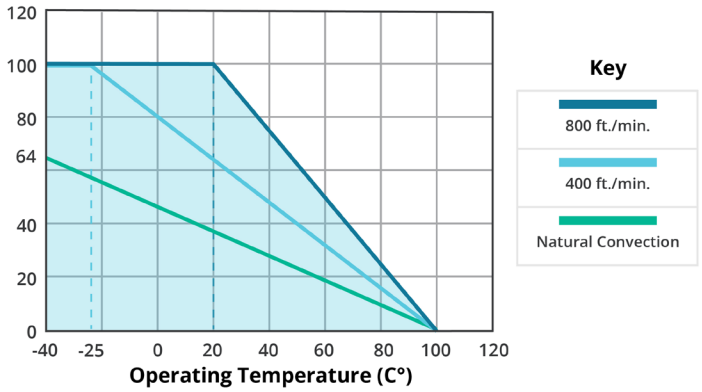

TEMPERATURE DERATING CURVE VFB400W-Q24-S24

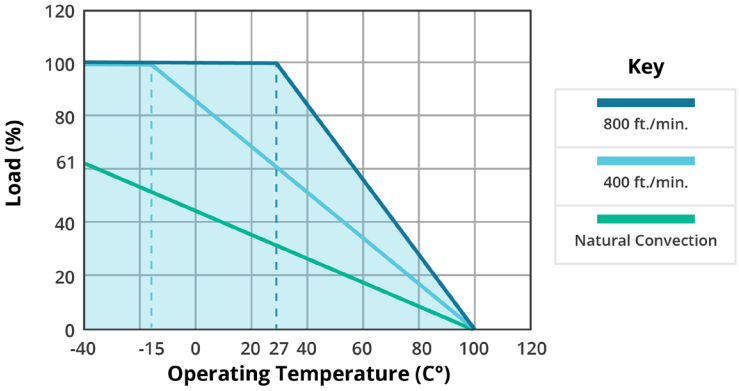

TEMPERATURE DERATING CURVE VFB400W-Q24-S28

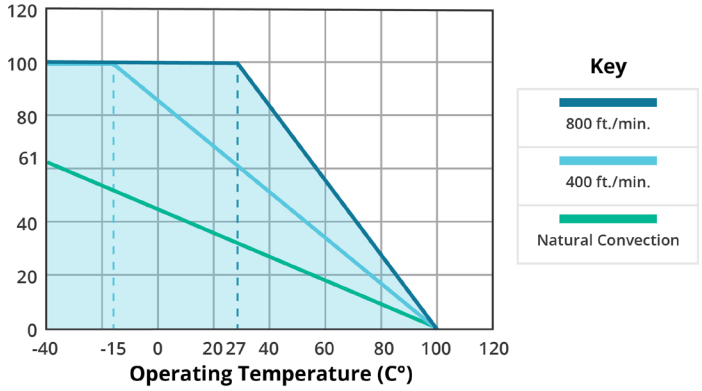

TEMPERATURE DERATING CURVE VFB400W-Q24-S48

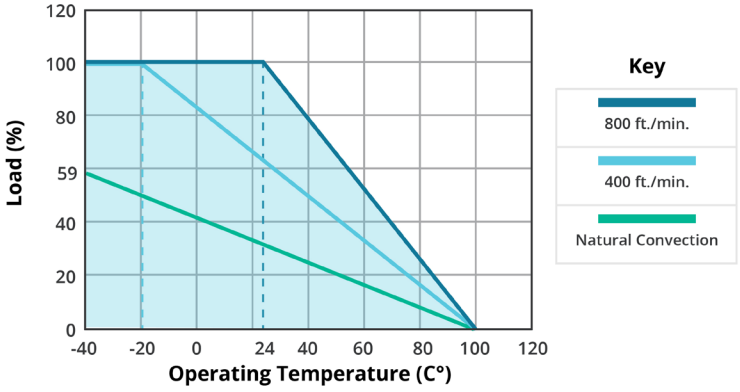

DERATING CURVES (CONTINUED)

TEMPERATURE DERATING CURVE
VFB400W-Q48-S5

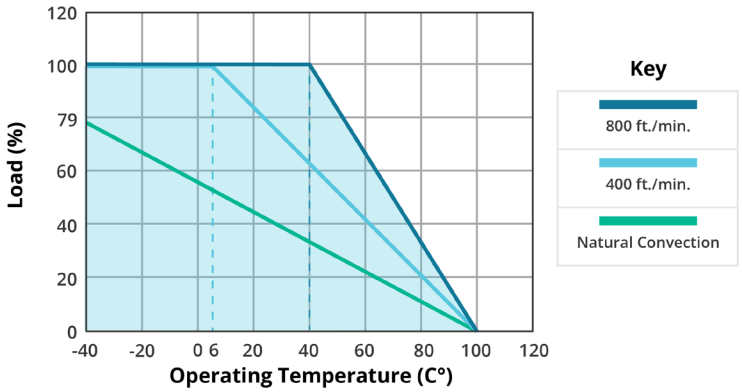

TEMPERATURE DERATING CURVE
VFB400W-Q48-S12

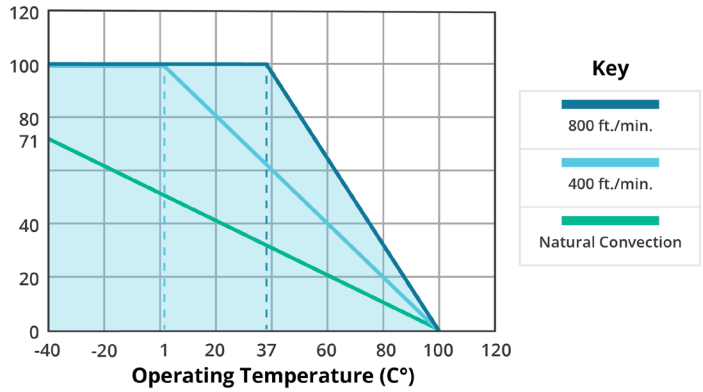

TEMPERATURE DERATING CURVE
VFB400W-Q48-S24

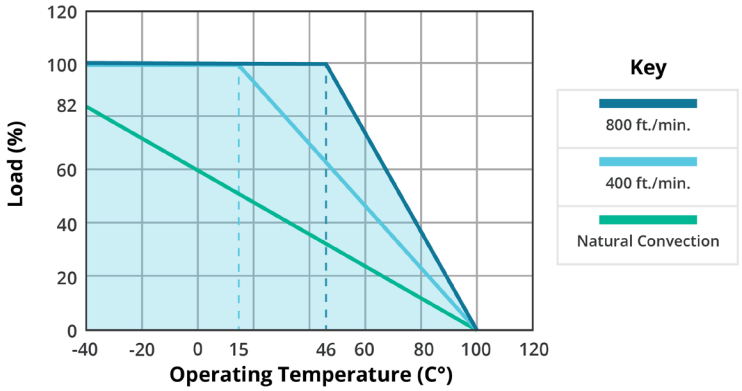

TEMPERATURE DERATING CURVE
VFB400W-Q48-S28

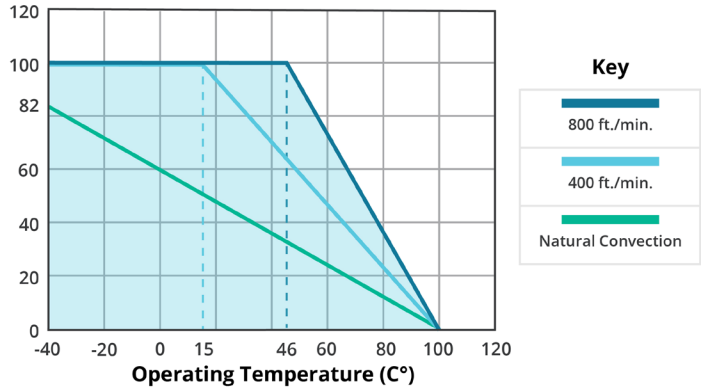

TEMPERATURE DERATING CURVE
VFB400W-Q48-S48

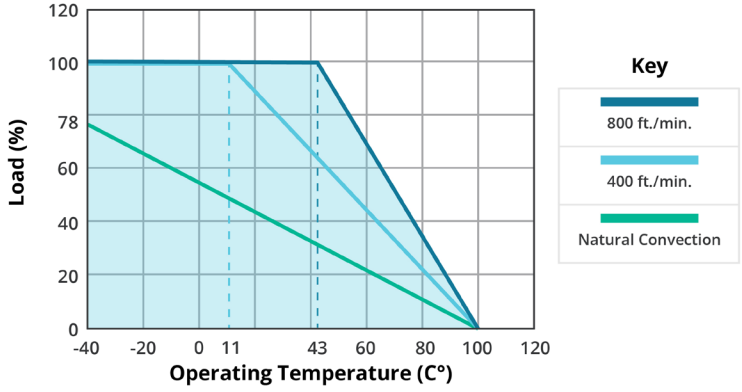

APPLICATION NOTES

1. **Parallel Operation**
The VFB400W series (excluding the 5 Vdc output models), are designed for parallel operation. When in parallel the load current can be shared equally between the two modules by connecting their PC pins. The VFB400W can be setup in two different modes to achieve parallel operation. The standard parallel operation is suitable when load cannot be handled by a single unit, whereas the N+1 redundant operation is suitable for loads when backup power is required.

Figure 1
Standard Parallel Connection

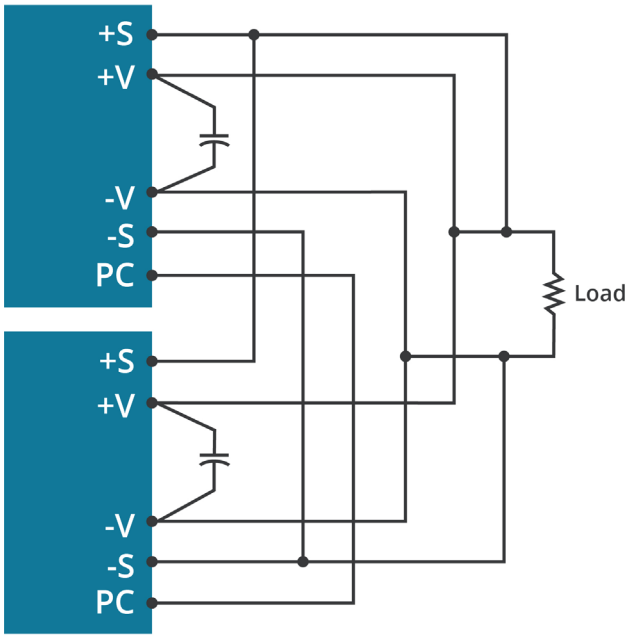

Figure 2
Parallel Connection With Programmed And Adjustable Output

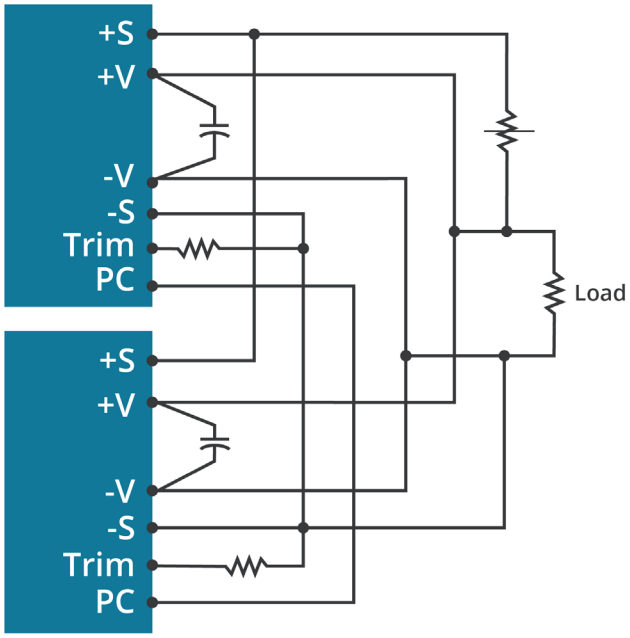

Figure 3
N+1 Redundant Connection

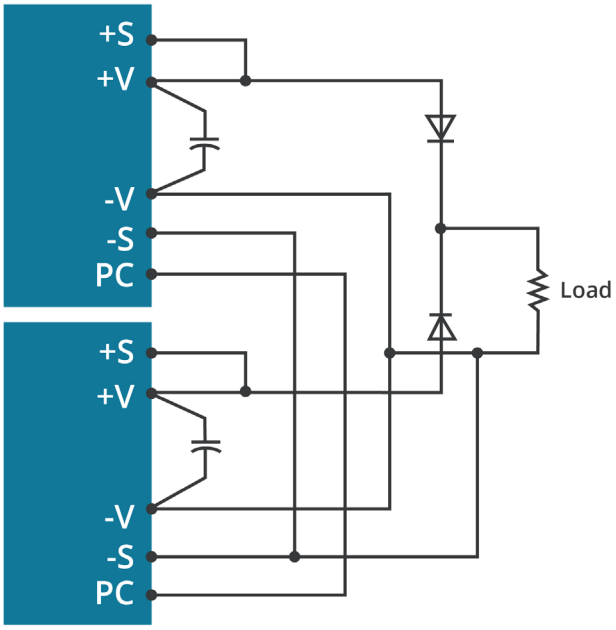

Figure 4
N+1 Redundant Connection With Programmed Output And Adjustable Output Voltage

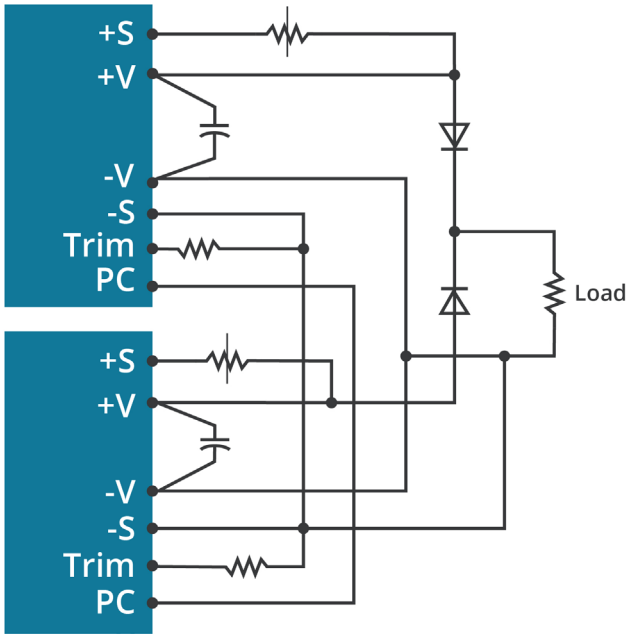

APPLICATION NOTES (CONTINUED)

2. **Output Voltage Trimming**
Leave open if not used.

Figure 5
External Resistors

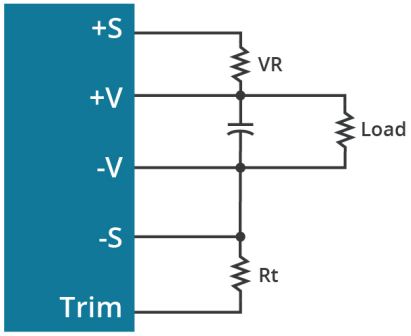

Trim-Up/Trim-Down Formulas

$$Vf = \frac{1.24 \times (\frac{Rt \times 33}{Rt + 33})}{7.68 + (\frac{Rt \times 33}{Rt + 33})}$$

$$Vout = (Vo + VR) \times Vf$$

Note: Rt = 6.8 KΩ
V_O is the nominal output voltage
V_{OUT} is the desired output voltage (up or down)
VR is the trim resistor in KΩ

Figure 6
External DC Voltage

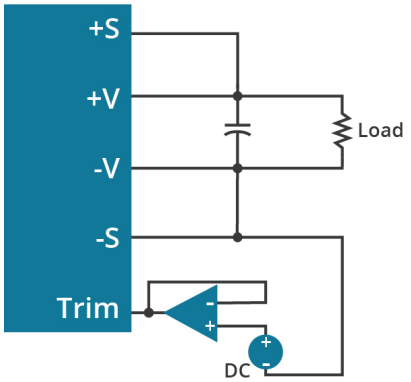

Trim-Up/Trim-Down Formulas

$$Vout = V_T \times Vo$$

Note: V_T is the trim terminal voltage
V_O is the nominal output voltage
V_{OUT} is the desired output voltage (up or down)

Note: 1. Models VFB400W-Q24-S24, S28 & S48 require a minimum input voltage of 13 Vdc and models VFB400W-Q48-S24, S28 & S48 require a minimum input voltage of 22 Vdc in order to trim between 100~110%.

3. **ON/OFF Control**
The converter's ON/OFF function can be controlled from the input side or from the output side. The maximum current through the ON/OFF pin is 10mA. The resistor value has to be set appropriately to avoid the maximum current through the ON/OFF pins.

(A) Controlling the ON/OFF terminal from the input side. Recommended R1 value is 12KΩ (1.0W) for 48V_{IN} and 6KΩ (0.5W) for 24V_{IN}

(B) Controlling the ON/OFF terminal from the output side. Recommended R2 value is 4.3KΩ (0.1W)

Figure 7

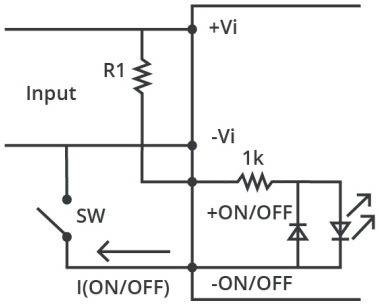

Figure 8

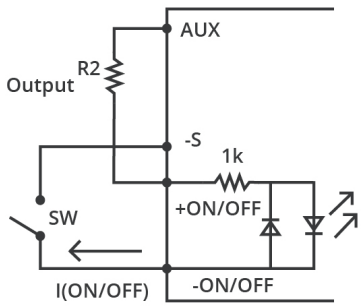

APPLICATION NOTES (CONTINUED)

4. **IOG Signal**
Normal and abnormal operation of the converter can be monitored by using the I.O.G signal. Output of this signal monitor is located at the secondary side and is open collector output, you can use the signal by the internal aux power supply or the the external DC supply as the following figures. the ground reference is the –Sense. This signal is LOW when the converter is normally operating and HIGH when the converter is disabled or when the converter is abnormally operating.

Figure 9
Internal AUX Power

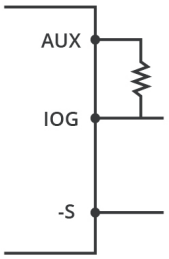

Figure 10
External DC Power

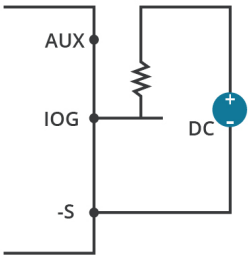

5. **Test Configuration**

Figure 11

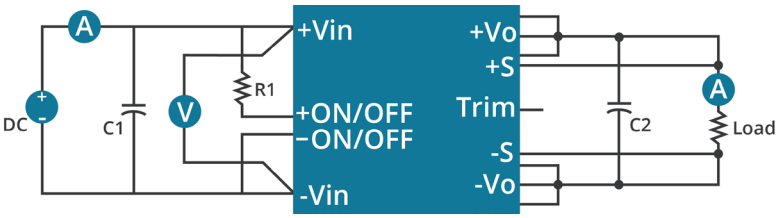

Table 1

Recommended External components	
C1	< 0.7 Ω ESR 1000 µF/50 V (24 Vin models) 330 µF/100 V (48 Vin models)
C2	Choose according to the output capacitance (see page 2)

Notes:
1. All specifications measured at nominal line, full load, and 25°C unless otherwise specified.
2. Remote on/off control has to be connected for the converter to operate.
3. If the remote sense feature is not to be used, the +sense pin should be connected to the +Vout pin and the -sense pin should be connected to the -Vout pin.

REVISION HISTORY

rev.	description	date
1.0	initial release	01/30/2014
1.01	product image and company logo updated	02/15/2021
1.02	derating curves and circuit figures updated	09/09/2021
1.03	IOC pin change to IOG	09/05/2023

The revision history provided is for informational purposes only and is believed to be accurate.

CUI INC
a bel group

Headquarters
20050 SW 112th Ave.
Tualatin, OR 97062
800.275.4899

Fax 503.612.2383
cui.com
techsupport@cui.com

CUI offers a two (2) year limited warranty. Complete warranty information is listed on our website.

CUI reserves the right to make changes to the product at any time without notice. Information provided by CUI is believed to be accurate and reliable. However, no responsibility is assumed by CUI for its use, nor for any infringements of patents or other rights of third parties which may result from its use.

CUI products are not authorized or warranted for use as critical components in equipment that requires an extremely high level of reliability. A critical component is any component of a life support device or system whose failure to perform can be reasonably expected to cause the failure of the life support device or system, or to affect its safety or effectiveness.