CUI INC
a bel group

SERIES: VFB600 | DESCRIPTION: DC-DC CONVERTER

FEATURES

- up to 700 W isolated output
- industry standard full brick package
- 2:1 input range (18~36 Vdc, 36~75 Vdc)
- single output from 12~48 Vdc
- 1,500 Vdc isolation
- over current, over temperature, over voltage, and short circuit protections
- remote on/off
- efficiency up to 92%

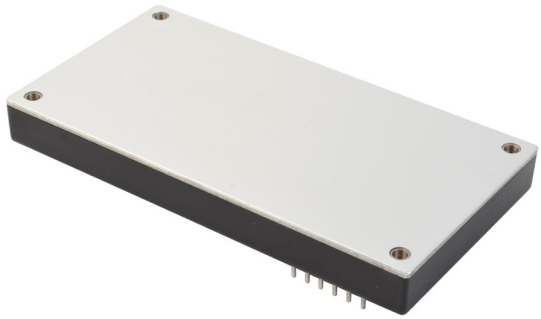

MODEL

MODEL	input voltage typ (Vdc)	input voltage range (Vdc)	output voltage (Vdc)	output current max (A)	output power max (W)	ripple and noise[1] max (mVp-p)	efficiency typ (%)
VFB600-D24-S12	24	18~36	12	50	600	120	88
VFB600-D24-S24	24	18~36	24	25	600	240	90
VFB600-D24-S28	24	18~36	28	21.5	600	280	90
VFB600-D24-S32	24	18~36	32	19	600	320	91
VFB600-D24-S48	24	18~36	48	12.5	600	480	91
VFB600-D48-S12	48	36~75	12	50	600	120	90
VFB600-D48-S24	48	36~75	24	25	600	240	92
VFB600-D48-S28	48	36~75	28	25	700	280	91
VFB600-D48-S32	48	36~75	32	19	600	320	92
VFB600-D48-S48	48	36~75	48	12.5	600	480	92

Notes:
1. Ripple and noise measured at full load, 20 MHz BW with 10 µF tantalum and 1 µF ceramic capacitor across the output.
2. An external input capacitor of 220 µF is recommended to reduce input ripple voltage.
3. All specifications measured at nominal line, full load, and 25°C unless otherwise specified.

PART NUMBER KEY

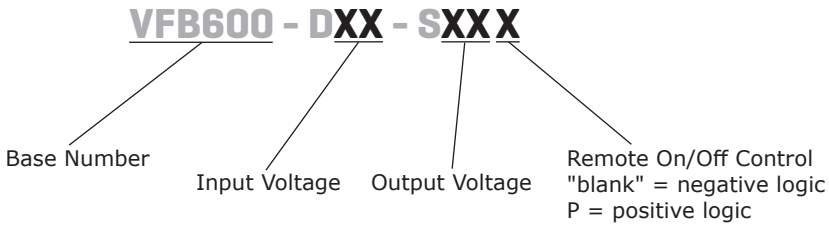

INPUT

parameter	conditions/description		min	typ	max	units
operating input voltage	24 Vdc input models 48 Vdc input models		18 36	24 48	36 75	Vdc Vdc
under voltage shutdown	24 Vdc input	power up power down		17 16		Vdc Vdc
	48 Vdc input	power up power down		35 33		Vdc Vdc
over voltage shutdown	24 Vdc input	power up power down		38 40		Vdc Vdc
	48 Vdc input	power up power down		77 80		Vdc Vdc
start-up time					250	ms
on/off[1]	positive logic	models ON (0~0.01 mA)				
		models OFF (1.0~10 mA)				
	negative logic	models ON (1.0~10 mA)				
		models OFF (0~0.01 mA)				
filter	pi filter					
input fuse	60 A time delay fuse for 24 Vin models, 30 A time delay fuse for 48 Vin models					

Note: 1. See application notes.

OUTPUT

parameter	conditions/description	min	typ	max	units
output capacitance[2]	12 Vdc output models all other models	470 470		10,000 5,000	µF µF
line regulation[2]	from low line to high line			±0.2	%
load regulation[2]	from full load to no load			±0.5	%
voltage accuracy[2]				±1.5	%
load share accuracy	from 50~100% load		±10		%
adjustability		60		110	%
switching frequency	48 Vdc input: 12 Vdc, 28 Vdc, 32 Vdc models all other models		300 250		kHz kHz
transient response	25% load step change			500	µs
temperature coefficient				±0.03	%/°C
power good (IOC)	Vout ready: low level, sink current Vout not ready: open drain output, applied voltage			20 50	mA V
auxiliary output voltage/current	10 ±3 Vdc, 20 mA max.				

Note: 2. Minimum capacitor values are required on the output to maintain the specified regulation.

PROTECTIONS

parameter	conditions/description	min	typ	max	units
short circuit protection	continuous				
over current protection		110		150	%
over voltage protection		115		140	%
over temperature protection	shutdown		110		°C

SAFETY AND COMPLIANCE

parameter	conditions/description	min	typ	max	units
isolation voltage	for 1 minute, input to output, input to case, or output to case	1,500			Vdc
isolation resistance		10			MΩ
isolation capacitance			4,000		pF
safety approvals	UL 60950-1				
MTBF	as per MIL-HDBK-217F at full load, GB, 25 °C		450,000		hours
RoHS	2011/65/EU (CE)				

ENVIRONMENTAL

parameter	conditions/description	min	typ	max	units
operating case temperature	see derating curve	-40		100	°C
storage temperature		-55		105	°C
humidity	non-condensing			95	%

SOLDERABILITY

parameter	conditions/description	min	typ	max	units
wave soldering	see wave soldering profile			260	°C

Notes:
1. Soldering materials: Sn/Cu/Ni
2. Ramp up rate during preheat: 1.4°C/s (from 50°C to 100°C)
3. Soaking temperature: 0.5°C/s (from 100°C to 130°C), 60±20 seconds
4. Peak temperature: 260°C, above 250°C for 3~6 seconds
5. Ramp down rate during cooling: -10°C/s (from 260°C to 150°C)

WAVE SOLDERING PROFILE

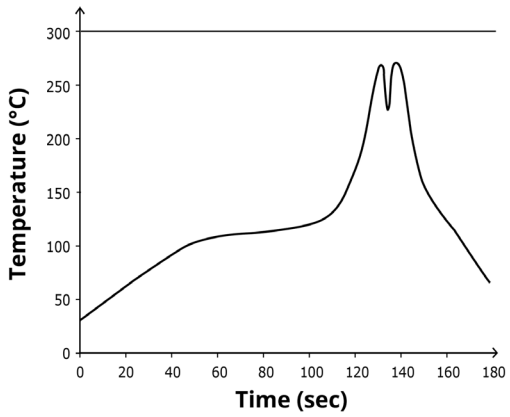

MECHANICAL

parameter	conditions/description	min	typ	max	units
dimensions	116.8 x 61.0 x 12.7(4.60 x 2.40 x 0.50 inch)				mm
case material	aluminum baseplate with plastic case				
weight			220		g

MECHANICAL DRAWING

units: mm[inch]
tolerance: X.X = ±0.5[±0.02]
X.XX = ±0.25[±0.010]

pin diameter tolerance: ±0.1[±0.004]

PIN CONNECTIONS	
Pin	Function
1	-Vin
2	+Vin
3	-ON/OFF
4	+ON/OFF
5	+Vo
6	+Vo
7	+Vo
8	-Vo
9	-Vo
10	-Vo
11	-S
12	+S
13	TRIM
14	PC/NC
15	IOC
16	AUX

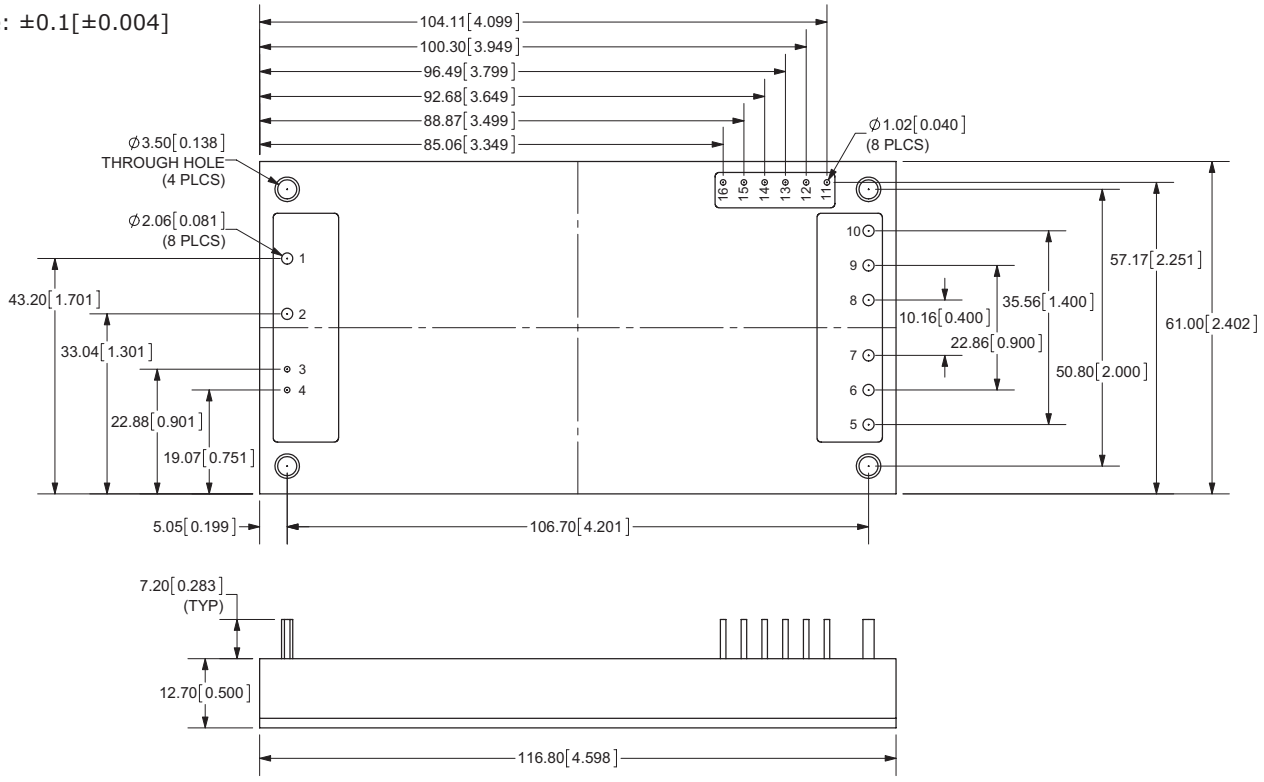

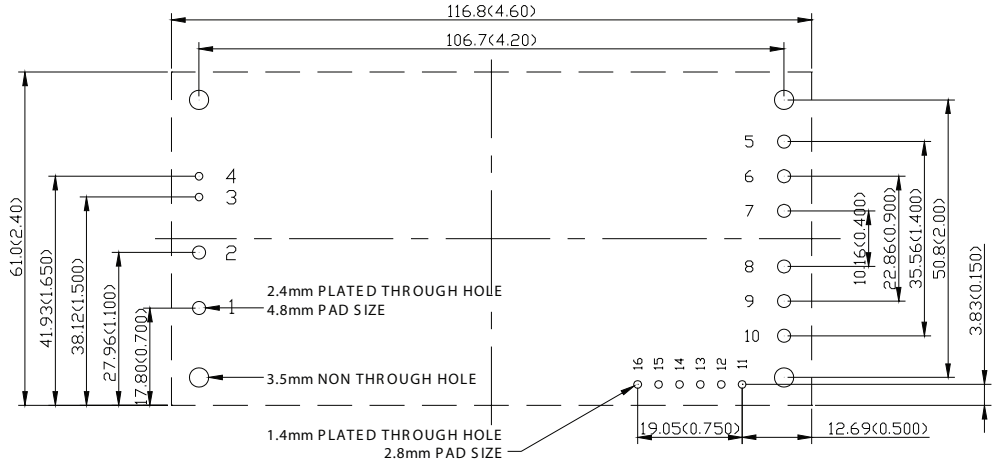

PCB Layout
Top View

DERATING CURVES

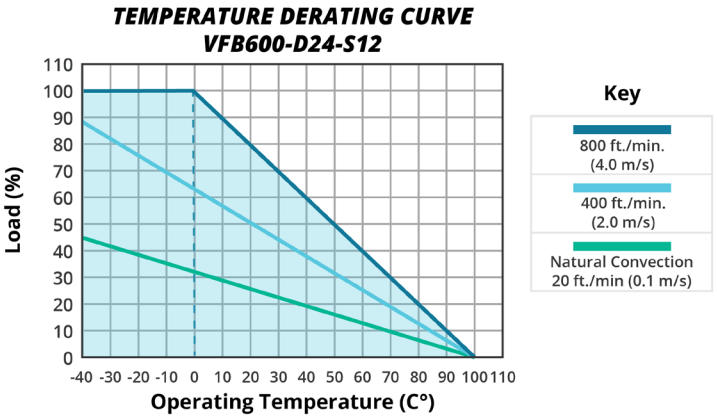

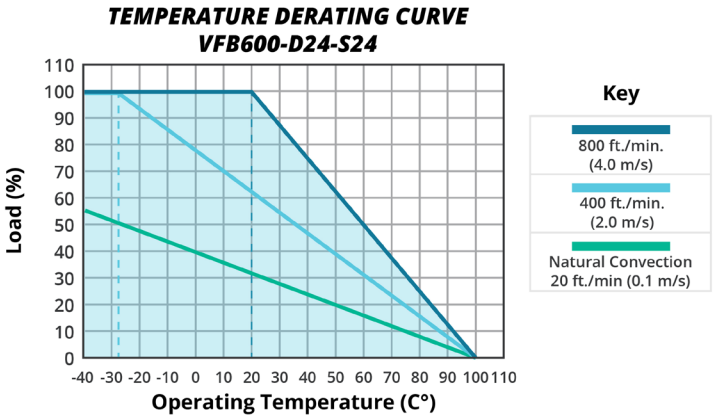

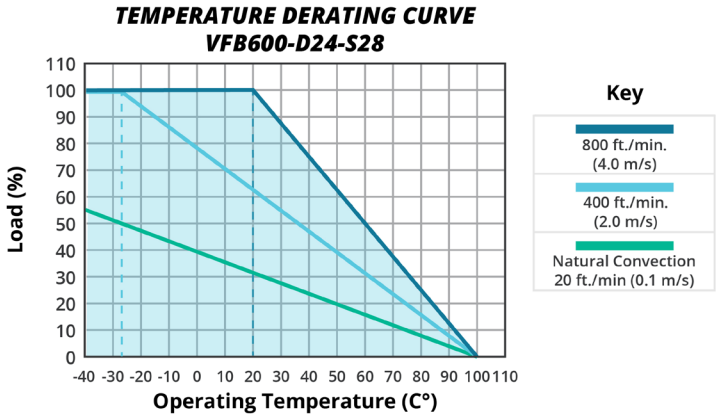

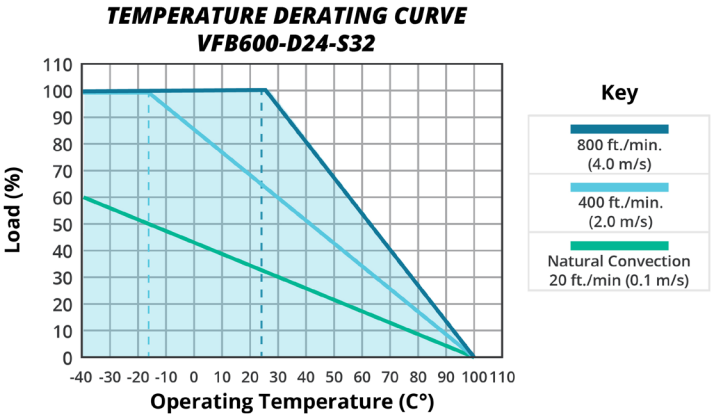

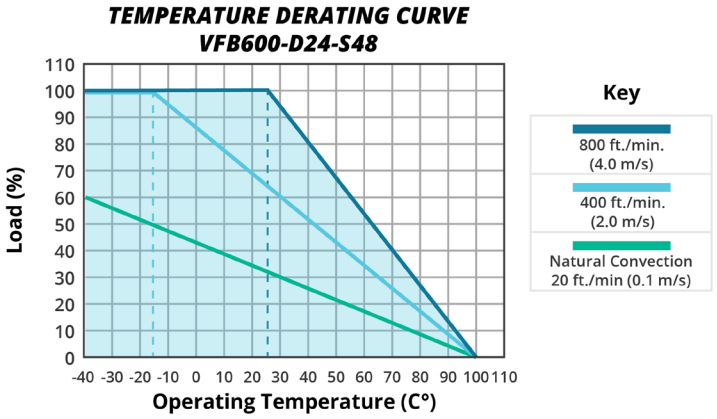

DERATING CURVES (CONTINUED)

TEMPERATURE DERATING CURVE VFB600-D48-S12

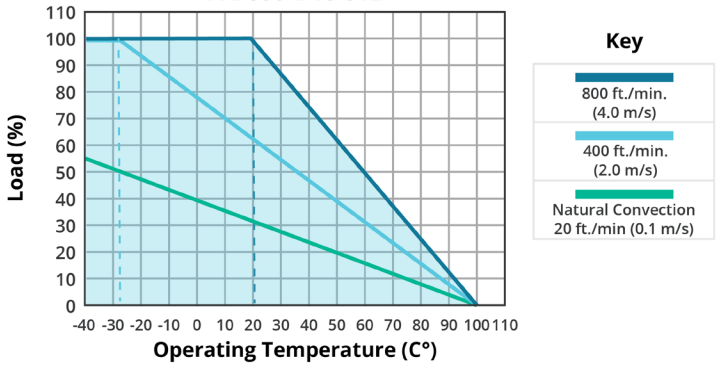

TEMPERATURE DERATING CURVE VFB600-D48-S24

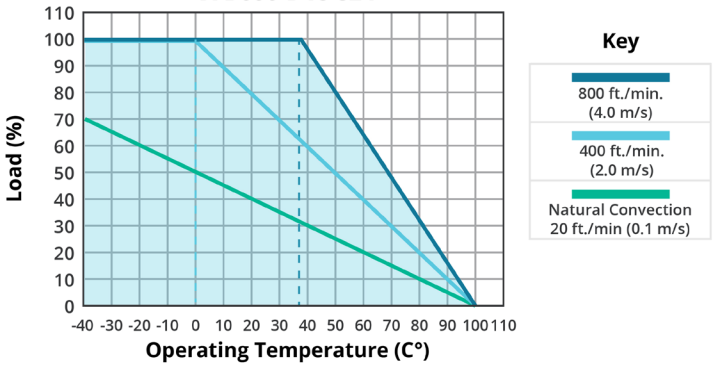

TEMPERATURE DERATING CURVE VFB600-D48-S28

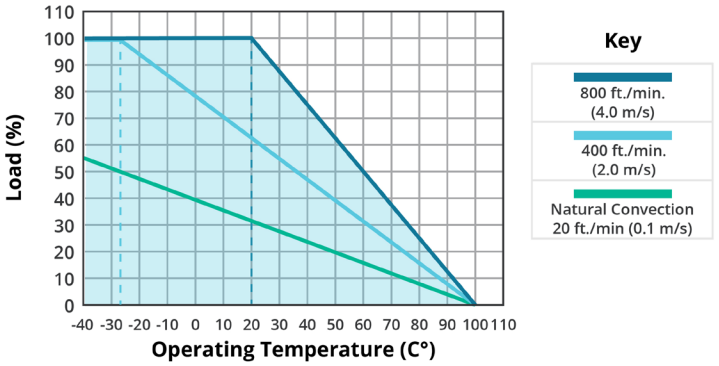

TEMPERATURE DERATING CURVE VFB600-D48-S32

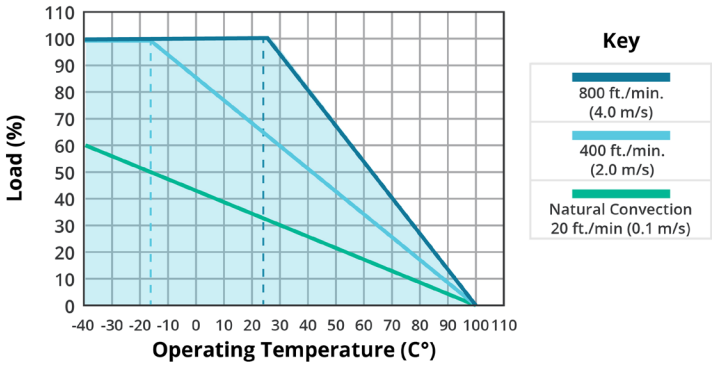

TEMPERATURE DERATING CURVE VFB600-D48-S48

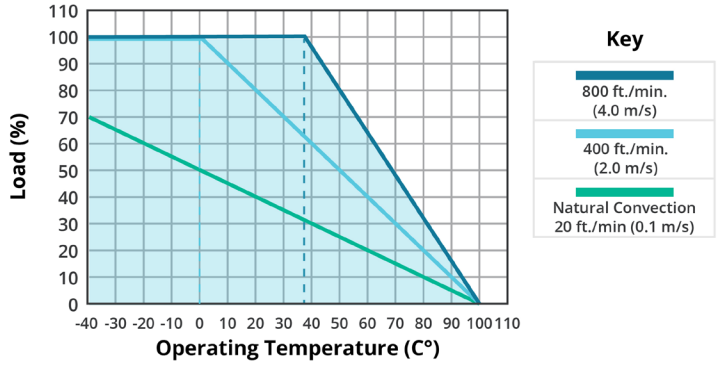

EFFICIENCY CURVES

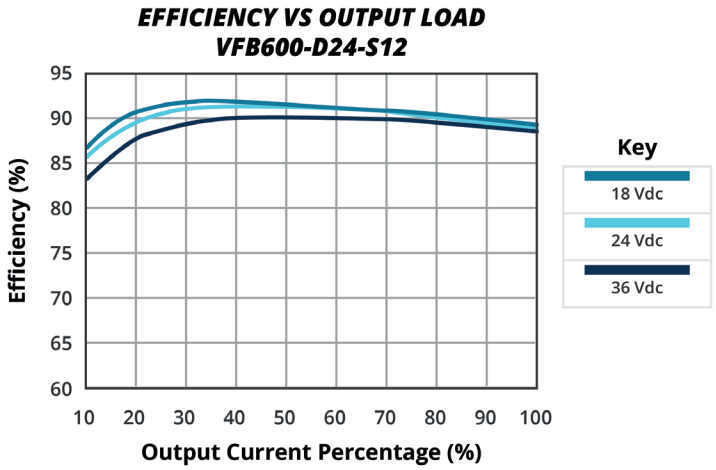

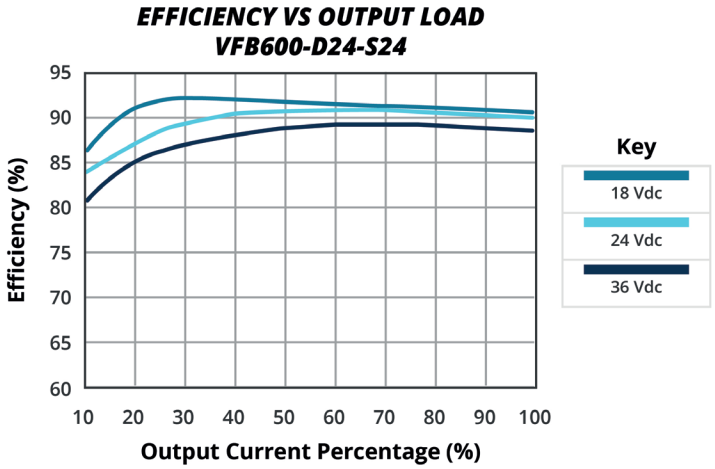

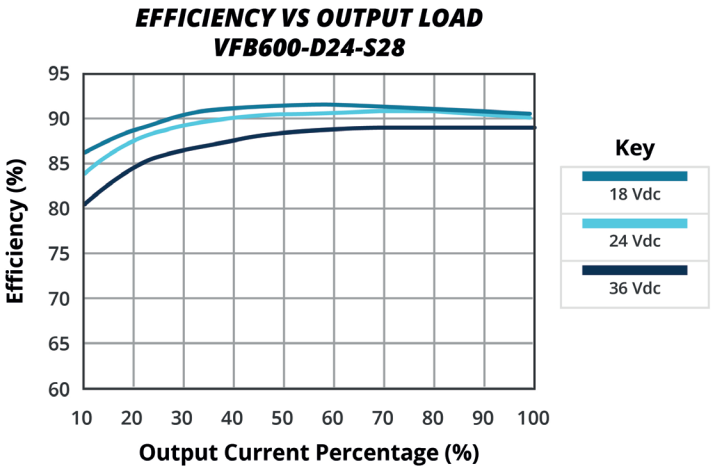

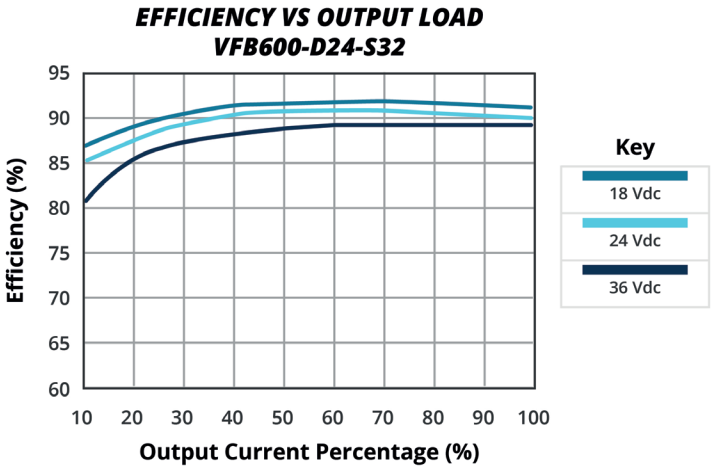

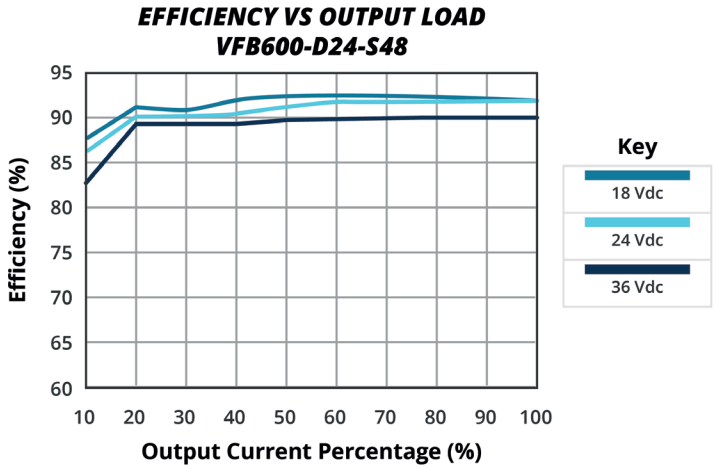

EFFICIENCY CURVES (CONTINUED)

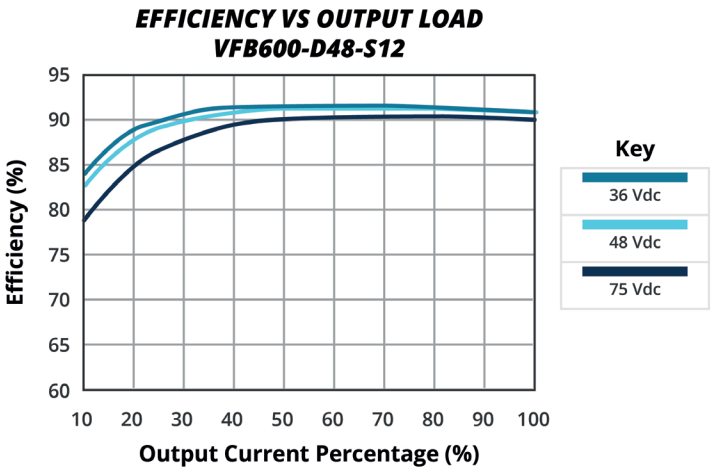

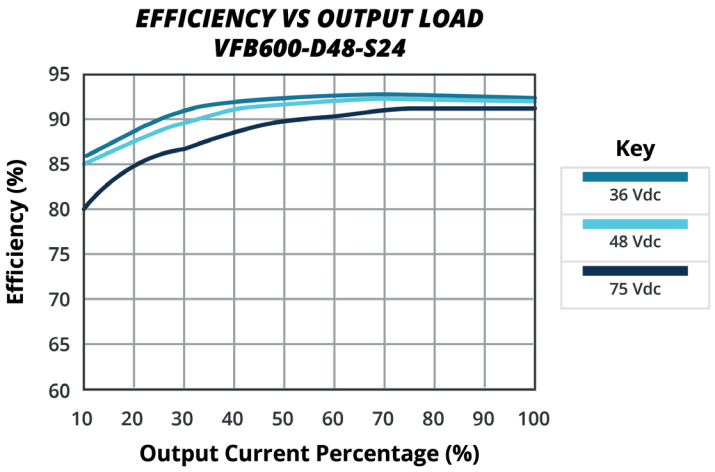

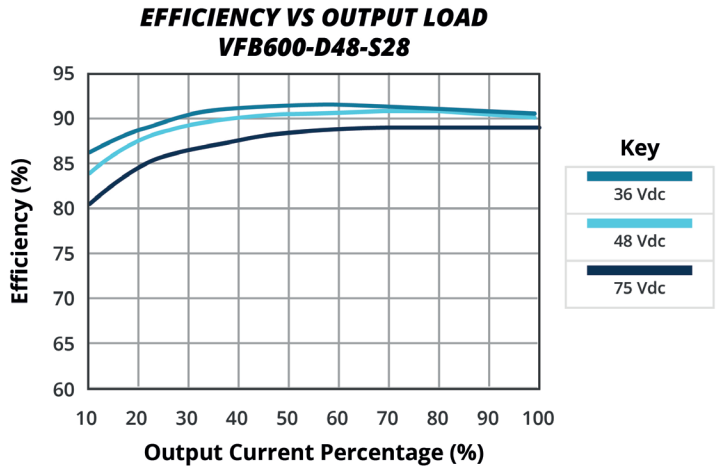

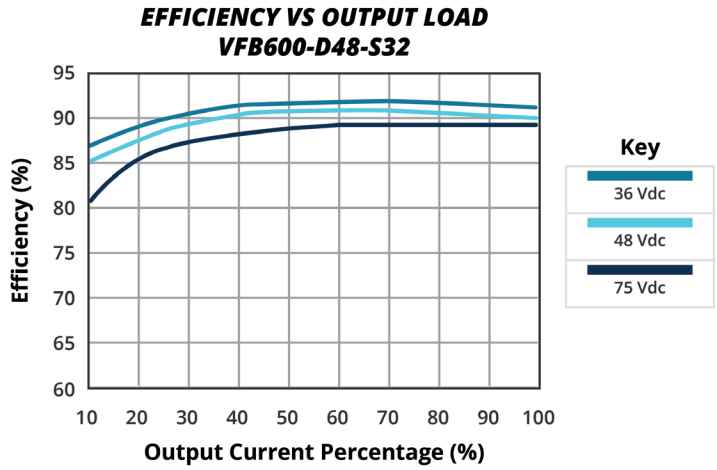

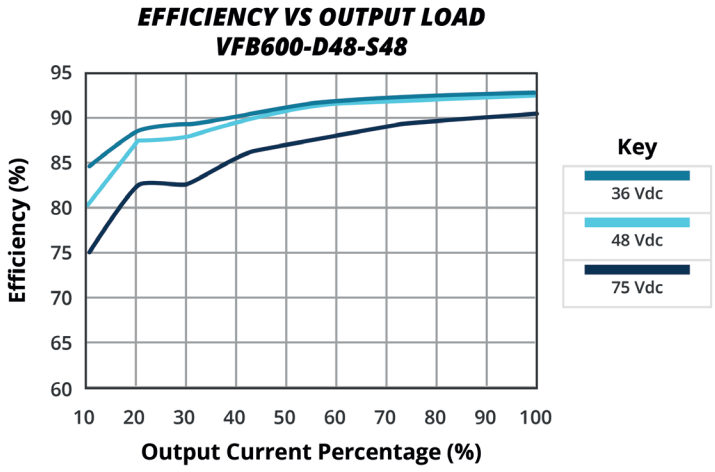

APPLICATION NOTES

1. **Parallel Operation**
The VFB600 series is designed for parallel operation. When in parallel the load current can be shared equally between the two modules by connecting their PC pins. The VFB600 can be setup in two different modes to achieve parallel operation. The standard parallel operation is suitable when load cannot be handled by a single unit, whereas the N+1 redundant operation is suitable for loads when backup power is required.

Figure 1
Standard Parallel Connection

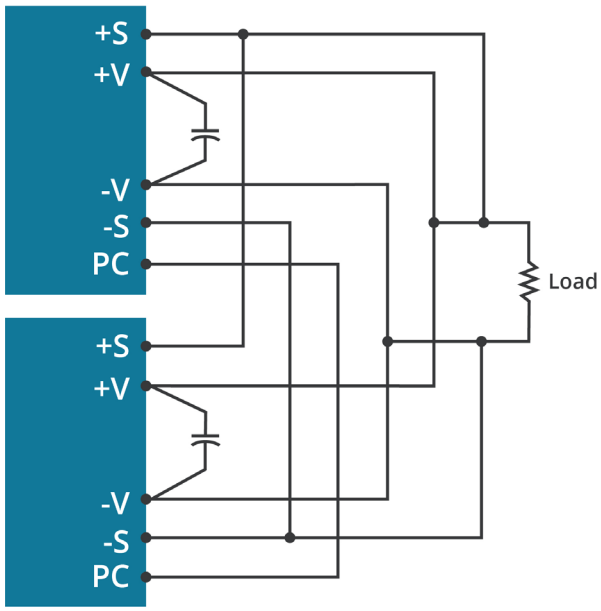

Figure 2
Parallel Connection With Programmed And Adjustable Output

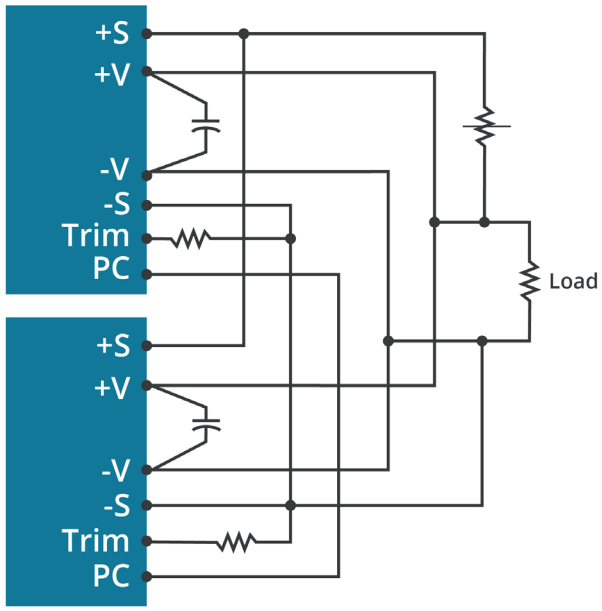

Figure 3
N+1 Redundant Connection

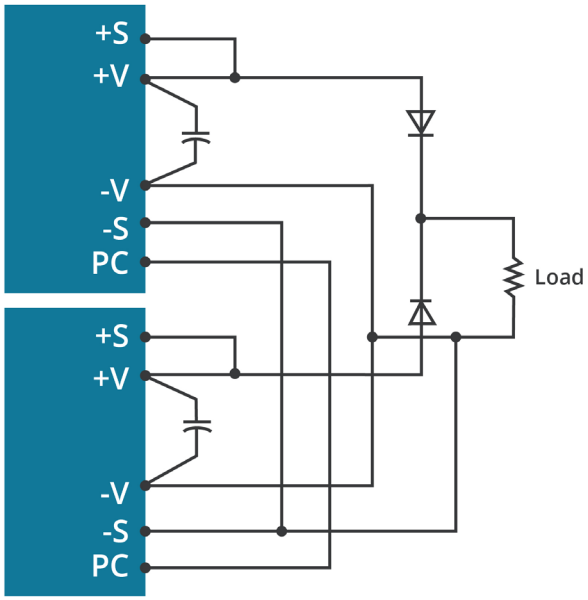

Figure 4
N+1 Redundant Connection With Programmed Output And Adjustable Output Voltage

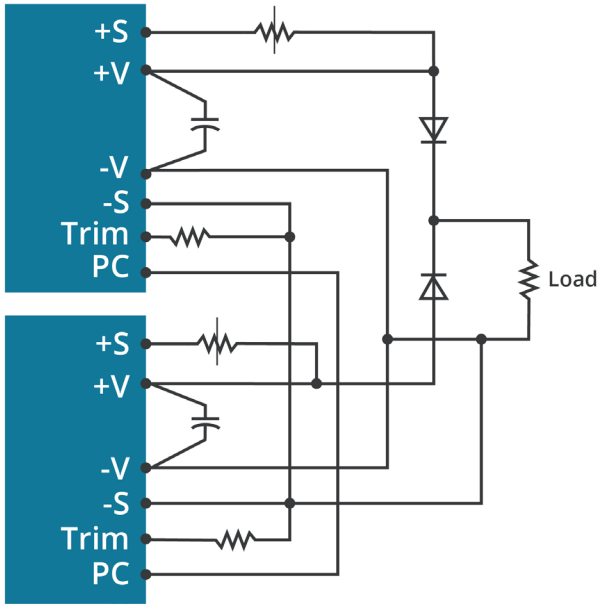

APPLICATION NOTES (CONTINUED)

2. **Output Voltage Trimming**
Leave open if not used.

Figure 5
External Resistors

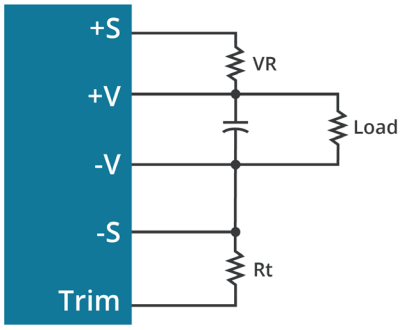

Trim-Up/Trim-Down Formulas

$$Vf = \frac{1.24 \times \left(\frac{Rt \times 33}{Rt + 33}\right)}{7.68 + \left(\frac{Rt \times 33}{Rt + 33}\right)}$$

$$Vout = (Vo + VR) \times Vf$$

Note: Rt = 6.8 kΩ
V_O is the nominal output voltage
V_{OUT} is the desired output voltage (up or down)
VR is the trim resistor in kΩ

Figure 6
External DC Voltage

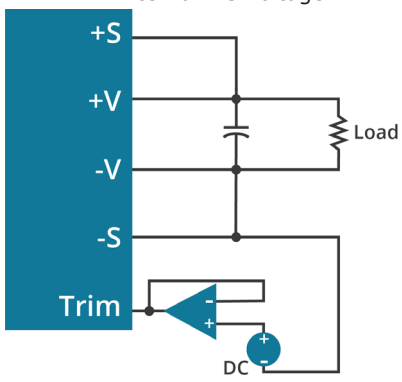

Trim-Up/Trim-Down Formula

$$Vout = V_T \times V_O$$

Note: V_T is the trim terminal voltage
V_O is the nominal output voltage
V_{OUT} is the desired output voltage (up or down)

3. **ON/OFF Control**
The converter's ON/OFF function can be controlled from the input side or from the output side. The maximum current through the ON/OFF pin is 10 mA. The resistor value has to be set appropriately to avoid the maximum current through the ON/OFF pins. The remote on/off control has to be connected for the converter to operate.

(A) Controlling the ON/OFF terminal from the input side. Recommended R1 value is 30 kΩ (0.5 W) for 48V_{IN} and 15 kΩ (0.25 W) for 24V_{IN}

(B) Controlling the ON/OFF terminal from the output side. Recommended R2 value is 5.1 kΩ (0.1 W)

Figure 7

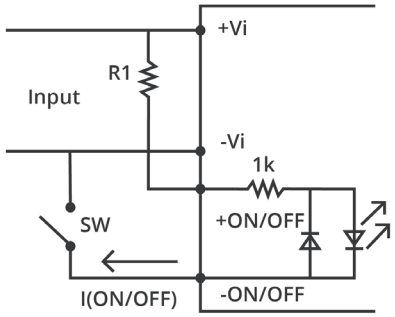

Figure 8

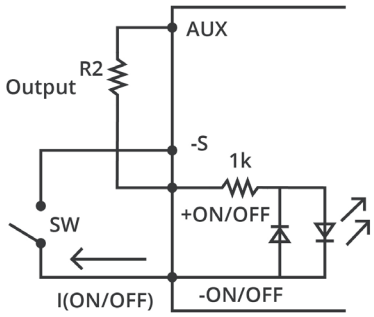

APPLICATION NOTES (CONTINUED)

4. **IOC Signal**
Normal and abnormal operation of the converter can be monitored by using the I.O.C signal. Output of this signal monitor is located at the secondary side and is open collector output, you can use the signal by the internal aux power supply or the the external DC supply as the following figures. the ground reference is the –Sense. This signal is LOW when the converter is normally operating and HIGH when the converter is disabled or when the converter is abnormally operating.

Figure 9
Internal AUX Power

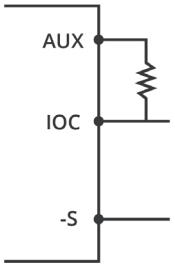

Figure 10
External DC Power

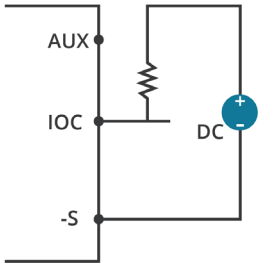

5. **Output Remote Sensing**
This series has the capability to remotely sense both lines of its output. This feature moves the effective output voltage regulation point from the output of the unit to the point of connection of the remote sense pins. This feature automatically adjusts the real output voltage in order to compensate for voltage drops in distribution and maintain a regulated voltage at the point of load. The voltage range of this is:

[(+Vout) – (-Vout)] – [(+Sense) – (-Sense)] ≤ 10% of the Vout nominal.

If the sense feature is not used, the sense pins should be connected locally to the respective Vout pins. Please note that although the output voltage can be increased by both the remote sense and by the trim, the maximum increase for the output voltage is not the sum of both.

Figure 11

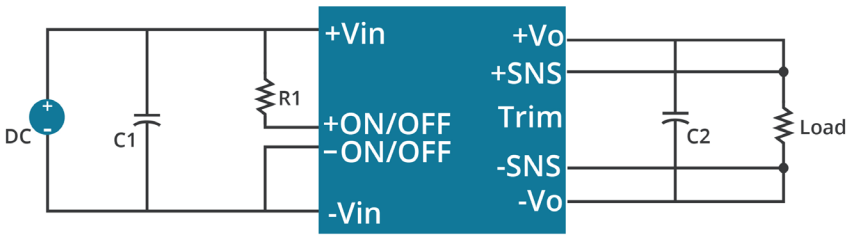

6. **Test Configuration**

Figure 12

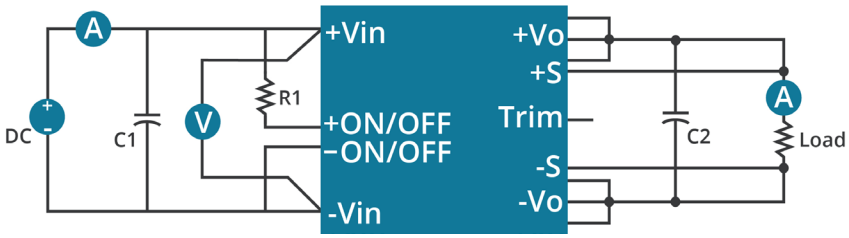

Table 1

Recommended External components	
C1	220 µF/100 V
C2	470 µF/100 V

REVISION HISTORY

rev.	description	date
1.0	initial release	06/27/2011
1.02	adjustability note added, V-Infinity branding removed	08/07/2012
1.03	updated spec	04/01/2013
1.04	added UL approvals to 24 Vdc and 48 Vdc output models	03/05/2014
1.05	added application note information	04/10/2017
1.06	product image and company logo updated	02/15/2021
1.07	derating curves, efficiency curves and circuit figures updated	09/14/2021
1.08	PN key updated	07/13/2022
1.09	company address updated	11/20/2024

The revision history provided is for informational purposes only and is believed to be accurate.

CUI INC
a bel group

Headquarters
15575 SW Sequoia Pkwy #100
Portland, OR 97224
800.275.4899

Fax 503.612.2383
cui.com
techsupport@cui.com

CUI offers a two (2) year limited warranty. Complete warranty information is listed on our website.

CUI reserves the right to make changes to the product at any time without notice. Information provided by CUI is believed to be accurate and reliable. However, no responsibility is assumed by CUI for its use, nor for any infringements of patents or other rights of third parties which may result from its use.

CUI products are not authorized or warranted for use as critical components in equipment that requires an extremely high level of reliability. A critical component is any component of a life support device or system whose failure to perform can be reasonably expected to cause the failure of the life support device or system, or to affect its safety or effectiveness.