CUI INC
a bel group

SERIES: VFK600 | DESCRIPTION: DC-DC CONVERTER

FEATURES

- up to 700 W isolated output
- rugged metal enclosure with integrated heat sink
- 2:1 input range (18~36 Vdc, 36~75 Vdc)
- single output from 12~48 Vdc
- 1,500 Vdc isolation
- over current, over temperature, over voltage, and short circuit protections
- remote on/off
- N+1 current sharing
- efficiency up to 92%



RoHS CE

MODEL

MODEL	input voltage range (Vdc)	output voltage (Vdc)	output current max (A)	output power max (W)	ripple and noise[1] max (mVp-p)	efficiency typ (%)
VFK600-D24-S12	18 ~ 36	12	50	600	120	89
VFK600-D24-S24	18 ~ 36	24	25	600	240	91
VFK600-D24-S28	18 ~ 36	28	21.5	600	280	90
VFK600-D24-S32	18 ~ 36	32	19	608	320	91
VFK600-D24-S48	18 ~ 36	48	12.5	600	480	92
VFK600-D48-S12	36 ~ 75	12	50	600	120	90
VFK600-D48-S24	36 ~ 75	24	25	600	240	91
VFK600-D48-S28	36 ~ 75	28	25	700	280	91
VFK600-D48-S32	36 ~ 75	32	19	608	320	92
VFK600-D48-S48	36 ~ 75	48	12.5	600	480	92

Notes: 1. Ripple and noise are measured at full load, 20 MHz BW with 10µF tantalum capacitor and 1µF ceramic capacitor across output

PART NUMBER KEY

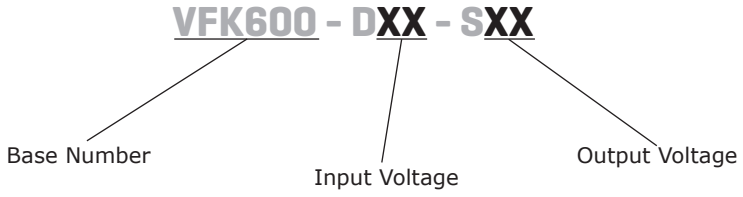

INPUT

parameter	conditions/description		min	typ	max	units
operating input voltage	24 Vdc input models 48 Vdc input models		18 36	24 48	36 75	Vdc Vdc
input current	24 Vdc input models, Vin = 18 Vdc, full load 48 Vdc input models, Vin = 36 Vdc, full load			37.7 21.7		A A
under voltage shutdown	24 Vdc input	power up power down	16 15	17 16	18 17	Vdc Vdc
	48 Vdc input	power up power down	34 32	35 33	36 34	Vdc Vdc
over voltage shutdown	24 Vdc input	power up power down		38 40		Vdc Vdc
	48 Vdc input	power up power down		77 80		Vdc Vdc
CTRL[1]	positive logic	models ON (3.5~7.5 Vdc or open circuit)				
		models OFF (0~0.7 Vdc)				
input fuse	60 A time delay fuse for 24 Vin models, 30 A time delay fuse for 48 Vin models					
filter	pi filter					

Note: 1. Open collector refer to -Vin.

OUTPUT

parameter	conditions/description	min	typ	max	units
maximum capacitive load	12 V output models 24~48 V output models	470 470		10,000 5,000	µF µF
line regulation	measured from low line to high line			±0.2	%
load regulation	measured from zero load to full load			±0.5	%
voltage accuracy				±1.5	%
load share accuracy	50~100% load		±10		%
adjustability		60		110	%
switching frequency	48 V input, 12/28/32 V output models all other models		300 250		kHz kHz
transient response	25% step load change			500	µs
temperature coefficient			±0.03		%/°C

PROTECTIONS

parameter	conditions/description	min	typ	max	units
short circuit protection	continuous				
over current protection	% nominal output current	110		150	%
over voltage protection	%Vo	115		140	%
over temperature protection	shutdown		110		°C

SAFETY AND COMPLIANCE

parameter	conditions/description	min	typ	max	units
isolation voltage	for 1 minute: input to output; input to case; output to case	1,500			Vdc
isolation resistance		10			MΩ
RoHS	2011/65/EU (CE)				

ENVIRONMENTAL

parameter	conditions/description	min	typ	max	units
operating temperature	see derating curves	-40		85	°C
storage temperature		-55		105	°C

MECHANICAL

parameter	conditions/description	min	typ	max	units
dimensions	199.14 x 126.75 x 39.12 (7.84 x 4.99 x 1.54 inch)				mm
case material	steel and aluminum extrusion				
weight			1.2		kg

MECHANICAL DRAWING

units: mm[inch]
tolerance: X.XX = ±0.5[±0.02]
X.XXX = ±0.25[±0.010]

wire range: 22~12 AWG
screw size: #6-32

PIN CONNECTIONS	
PIN	FUNCTION
1, 2	+Vin
3	REM
4	case
5, 6	-Vin
7, 8	+Vo
9	+S
10	PC
11	Trim
12	-S
13, 14	-Vo

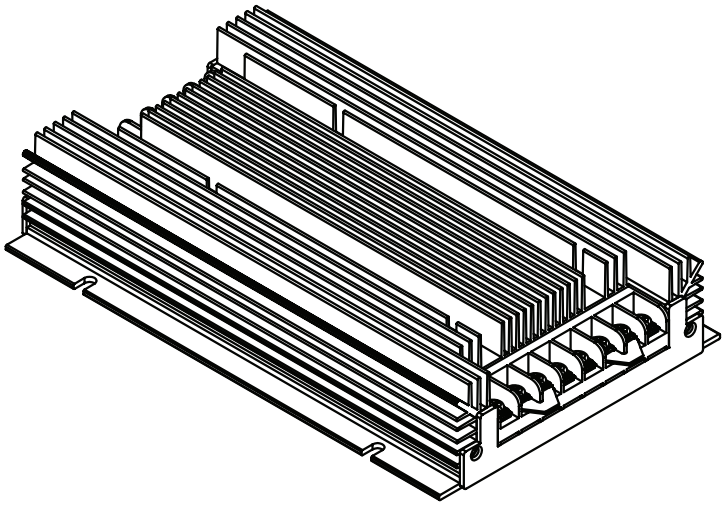

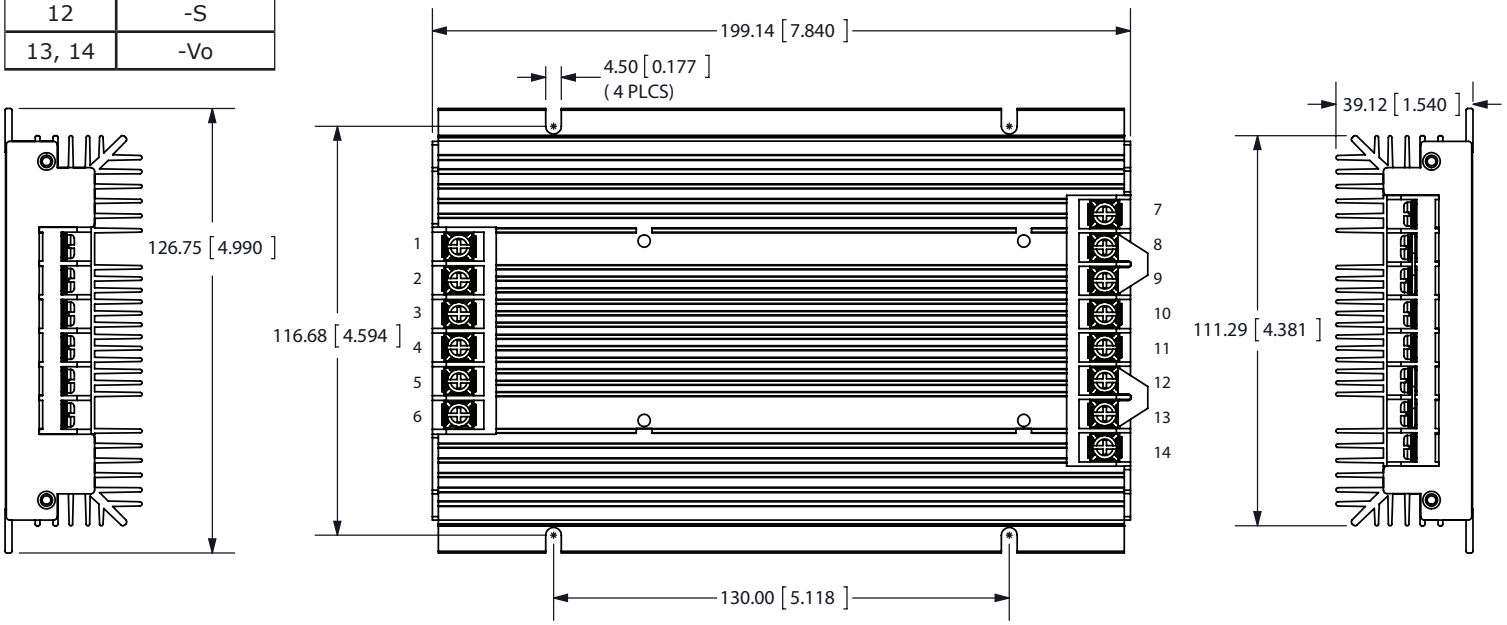

DERATING CURVES

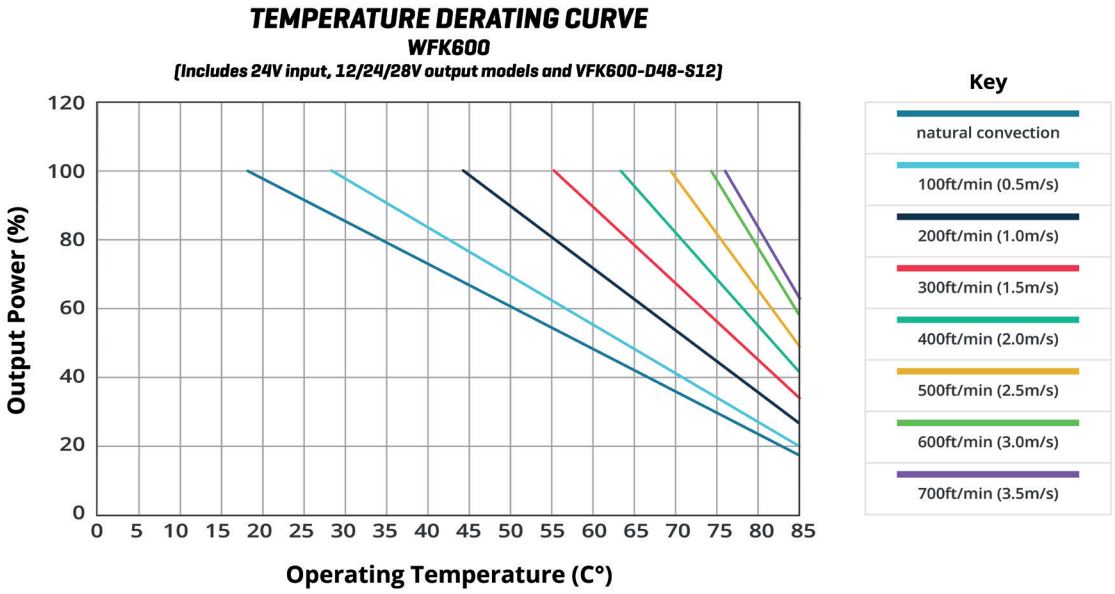

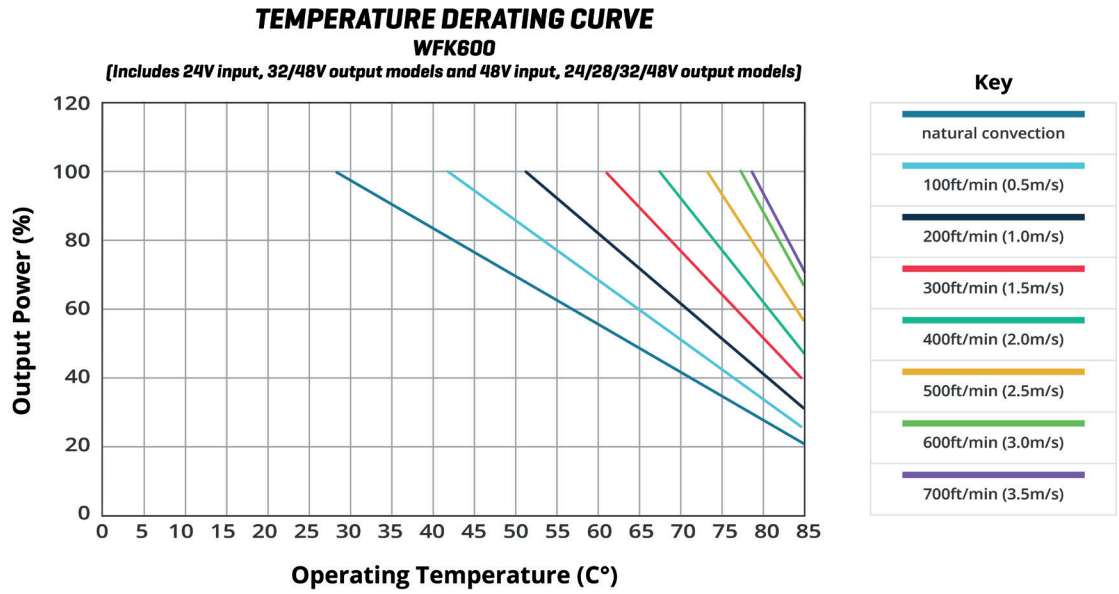

TEST CONFIGURATION

Figure 1

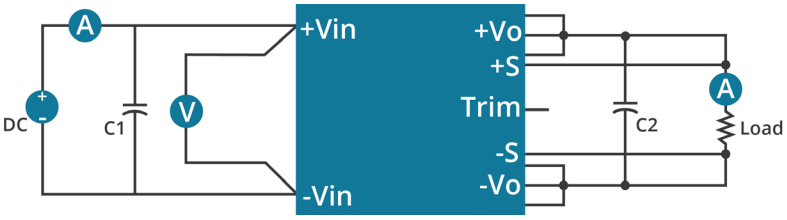

Table 1

Recommended External components	
C1	220 µF/100 V
C2	470 µF/100 V

APPLICATION NOTES

1. **Parallel Operation**
   The VFK600 series are designed for parallel operation. When in parallel the load current can be shared equally between the two modules by connecting their PC pins. The VFK600 can be setup in two different modes to achieve parallel operation. The stan dard parallel operation is suitable when load cannot be handled by a single unit, whereas the N+1 redundant operation is suitable for loads when backup power is required.

STANDARD PARALLEL CONNECTION

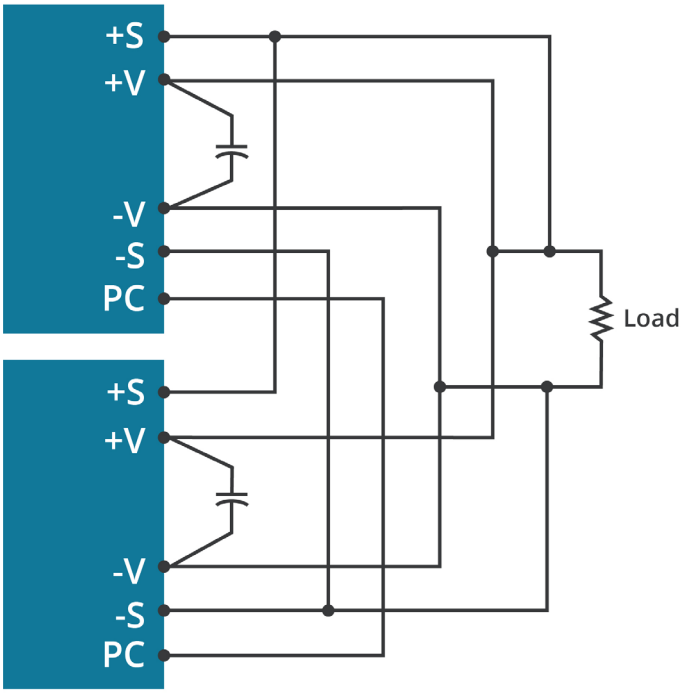

PARALLEL CONNECTION WITH PROGRAMMED AND ADJUSTABLE OUTPUT

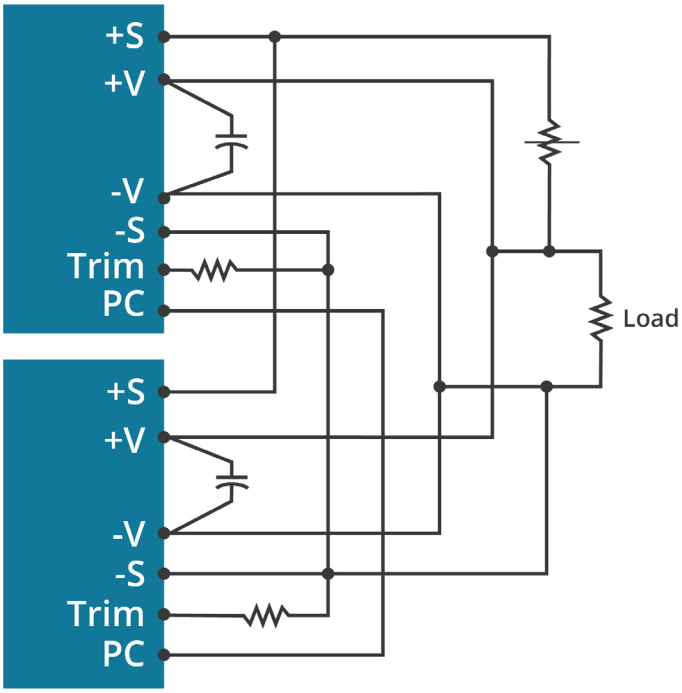

N+1 REDUNDANT CONNECTION

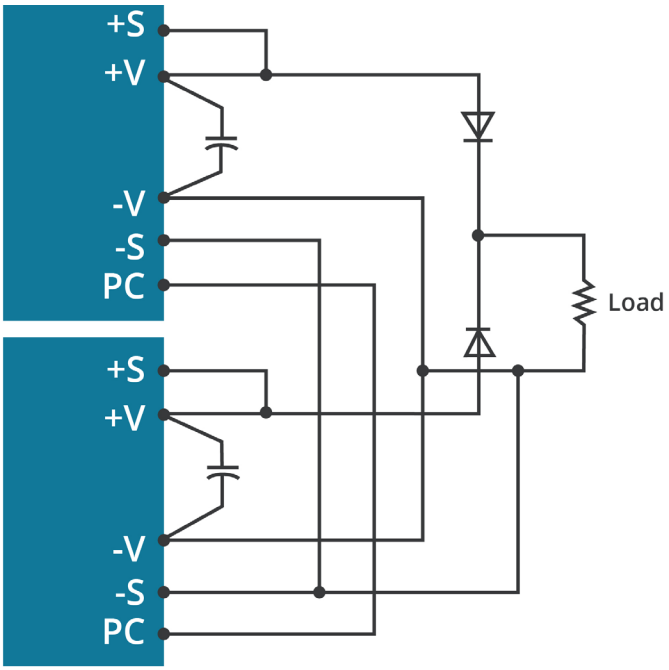

N+1 REDUNDANT CONNECTION WITH PROGRAMMED OUTPUT AND ADJUSTABLE OUTPUT VOLTAGE

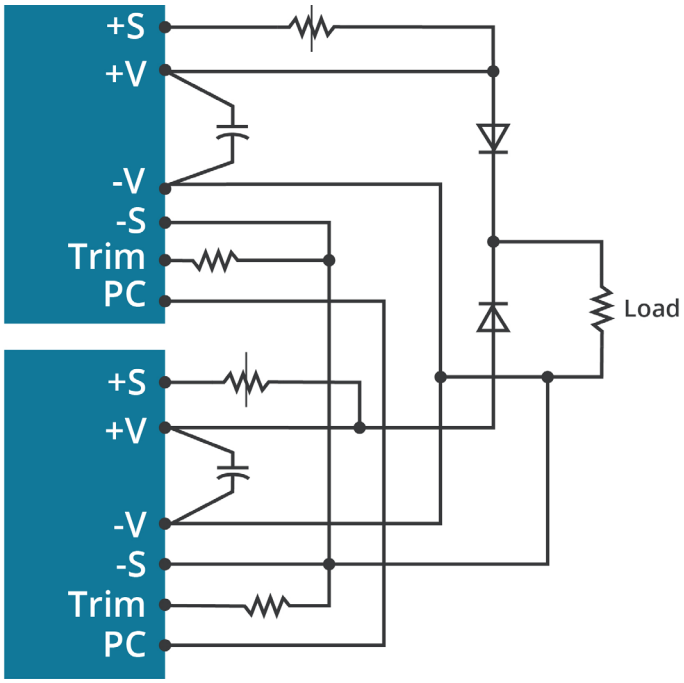

APPLICATION NOTES (CONTINUED)

2. **Output Voltage Trimming**
Leave open if not used.

Figure 2
External Resistors

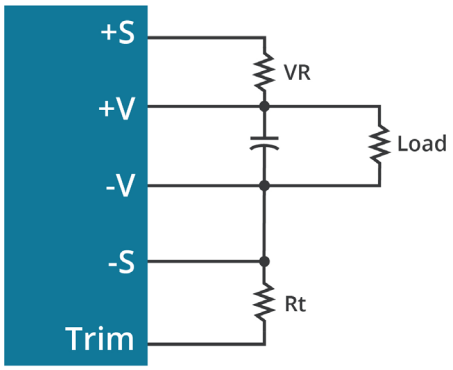

Trim-Up/Trim-Down Formulas

$$Vf = \frac{1.24 \times (\frac{Rt \times 33}{Rt + 33})}{7.68 + (\frac{Rt \times 33}{Rt + 33})}$$

$$Vout = (Vo + VR) \times Vf$$

Note: Rt = 6.8 KΩ
V_O is the nominal output voltage
V_{OUT} is the desired output voltage (up or down)
VR is the trim resistor in KΩ

Figure 3
External DC Voltage

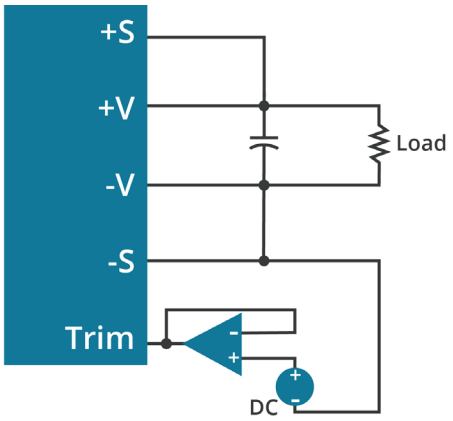

Trim-Up/Trim-Down Formulas

$$Vout = V_T \times V_O$$

Note: V_T is the trim terminal voltage
V_O is the nominal output voltage
V_{OUT} is the desired output voltage (up or down)

Note: 1. All specifications measured at nominal line, full load, and 25°C unless otherwise specified.

REVISION HISTORY

rev.	description	date
1.0	initial release	11/04/2011
1.01	derating curves added	03/12/2012
1.02	V-Infinity branding removed	08/07/2012
1.03	updated spec	03/13/2013
1.04	added parallel operation and trimming information	12/17/2013
1.05	company logo updated	02/15/2021
1.06	derating curve and circuit figures updated	09/13/2021

The revision history provided is for informational purposes only and is believed to be accurate.

CUI INC
a bel group

Headquarters
20050 SW 112th Ave.
Tualatin, OR 97062
800.275.4899

Fax 503.612.2383
cui.com
techsupport@cui.com

CUI offers a two (2) year limited warranty. Complete warranty information is listed on our website.

CUI reserves the right to make changes to the product at any time without notice. Information provided by CUI is believed to be accurate and reliable. However, no responsibility is assumed by CUI for its use, nor for any infringements of patents or other rights of third parties which may result from its use.

CUI products are not authorized or warranted for use as critical components in equipment that requires an extremely high level of reliability. A critical component is any component of a life support device or system whose failure to perform can be reasonably expected to cause the failure of the life support device or system, or to affect its safety or effectiveness.