TOP VIEW

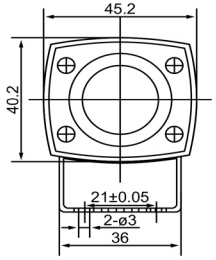

SIDE VIEW

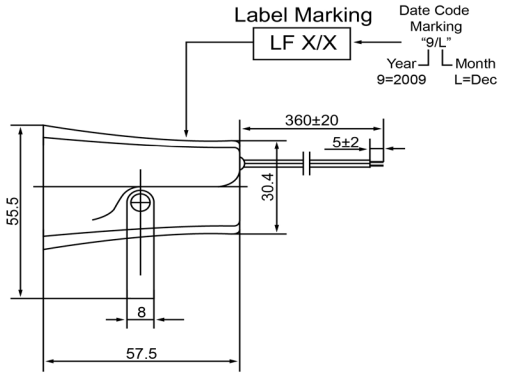

Specifications		
Description	**Value**	**Unit**
Technology	Piezo	
Resonant Frequency	3,500	(Hz)
Rated Voltage	24	(V)
SPL @ 10cm	100	(dBA)
Tone	Siren	
Mount Type	Bracket	
Voltage Range	12 ~ 28	(V)
Max Rated Current	150	(mA)
Housing Material	ABS	
Operating Temperature	-20 ~ +60	°C
Storage Temperature	-30 ~ +70	°C
Weight	75	(g)

Notes

1) All dimensions are in mm unless otherwise noted
2) All parts meet RoHS

DB UNLIMITED

Piezo Indicator

Revision History

Version	Description	Date	Approved
1	Released from Engineering	10/21/2013	J.S

Drawn by	Date	Checked by	Date	Approved by	Date
A.B.	10/21/2013	C.E.	10/21/2013	J.S	10/21/2013

IP441024-1

sales@dbunlimitedco.com | www.dbunlimitedco.com
©2013, DB Unlimited