DB UNLIMITED

Part Number: MM033802-1	DRAWN CJ	4/17/2016
	CHECKED P.D	4/20/2016
Description: Analog MEMS Microphone	APPROVED J.S	4/20/2016

This document contains data proprietary to DB Unlimited. Any use or reproduction, in any form, without prior written permission of DB Unlimited is prohibited. All terms and conditions can be found at www.dbunlimitedco.com

Top View

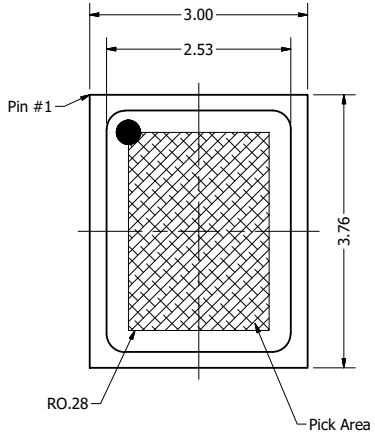

Side View

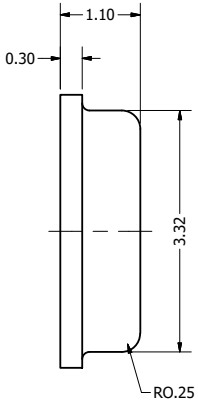

Bottom View (1)

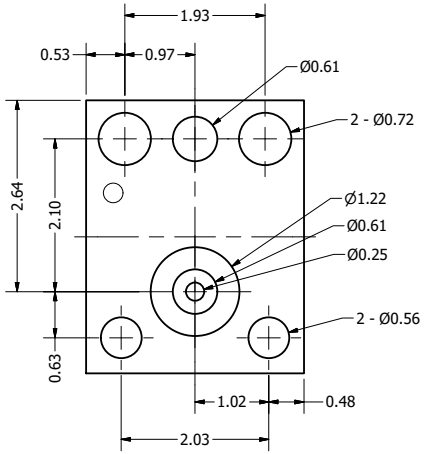

Bottom View (2)

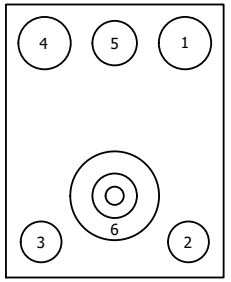

PIN NO.					
1	2	3	4	5	6
DATA	GND	GND	VDD	GND	GND

Items	Specifications	Conditions
Directivity	Omnidirectional	
Sensitivity	-38	dB
Frequency Range	70 ~ 16,000	Hz
Rated Voltage	2	V
Voltage Range	1.5 ~ 3.6	V
Output Impedance	300	Ω
Max. Rated Current	0.16	mA
Storage Temperature	-40 ~ +100	°C
Operating Temperature	-40 ~ +100	°C
Signal to Noise Ratio	62	dB
Mount Type	Surface Mount Pads	
Connection Method	Solder Pads	

REVISION HISTORY

REV	DESCRIPTION	DATE	APPROVED
	Released from Engineering	4/20/2016	J.S.

NOTES

1) All dimensions are in mm unless otherwise noted
2) All tolerances are ± 0.5 mm unless otherwise noted
3) All parts meet RoHS
4) Subject to change or redrawn without notice

Additional considerations can be found at www.dbunlimitedco.com/technical-articles.