## SIDE VIEW

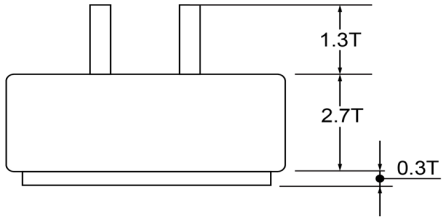


## ANGLED VIEW

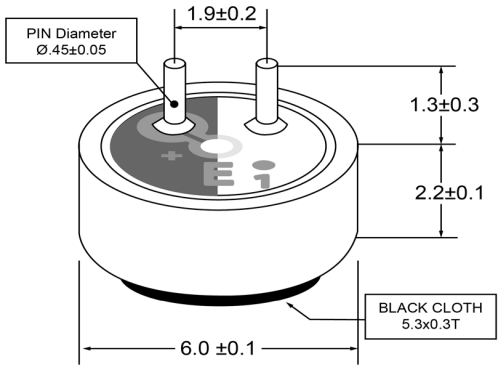


## BOTTOM VIEW

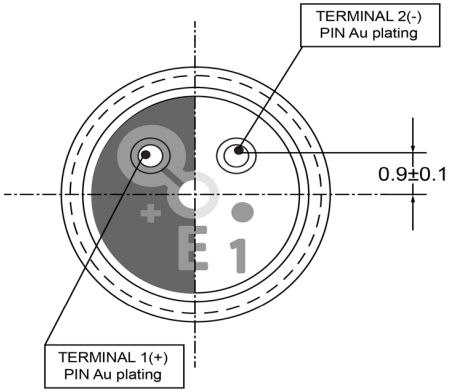


| Specifications | | |
|---|---|---|
| **Description** | **Value** | **Unit** |
| Directivity | Omnidirectional | |
| Technology | Electret Condenser | |
| Sensitivity | -44 | (dB) |
| Frequency Range | 40 ~ 20,000 | (Hz) |
| Rated Voltage | 2 | (V) |
| Output Impedance | 2,200 | (Ohm) |
| Connection Method | PC Pins | |
| Voltage Range | 1 ~ 10 | (V) |
| Max Rated Current | 0.45 | (mA) |
| Minimum Signal to Noise Ratio | >60 | (dB) |
| Operating Temperature | -40 ~ +85 | °C |
| Storage Temperature | -40 ~ +85 | °C |

**Notes**

1) All dimensions are in mm unless otherwise noted
2) All parts meet RoHS

DB UNLIMITED

**Revision History**

| Version | Description | Date | Approved |
|---|---|---|---|
| 1 | Released from Engineering | 10/21/2013 | J.S |
| | | | |
| | | | |
| | | | |
| | | | |
| | | | |
| | | | |
| | | | |

| Drawn by | Date | Checked by | Date | Approved by | Date |
|---|---|---|---|---|---|
| A.B. | 10/21/2013 | C.E. | 10/21/2013 | J.S | 10/21/2013 |

**Electret Condenser Microphone**

**MO064402-6**

Additional considerations can be found at www.dbunlimitedco.com/technical-articles.

sales@dbunlimitedco.com | www.dbunlimitedco.com
©2013, DB Unlimited