DB UNLIMITED

Part Number: SM180808-1	DRAWN CJ	5/14/2018
	CHECKED C.H.	5/15/2018
Description: Dynamic Speaker	APPROVED C.E.	5/15/2018

This document contains data proprietary to DB Unlimited. Any use or reproduction, in any form, without prior written permission of DB Unlimited is prohibited. All terms and conditions can be found at www.dbunlimitedco.com

Top View

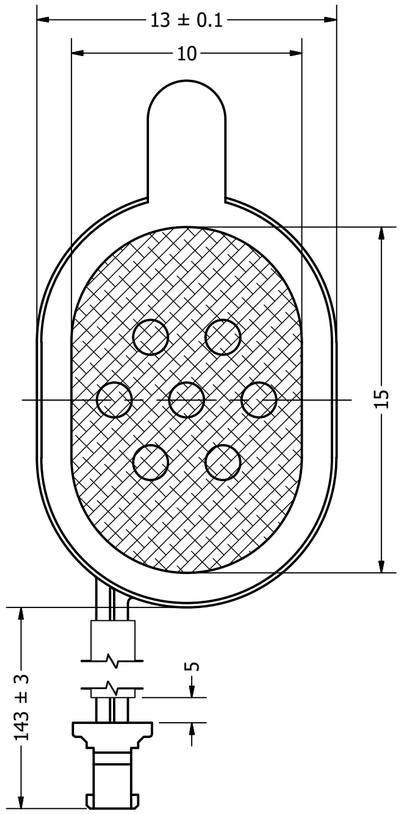

Side View

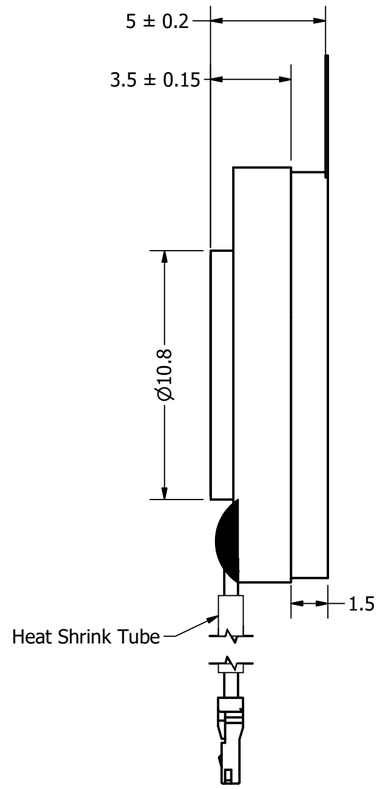

Bottom View

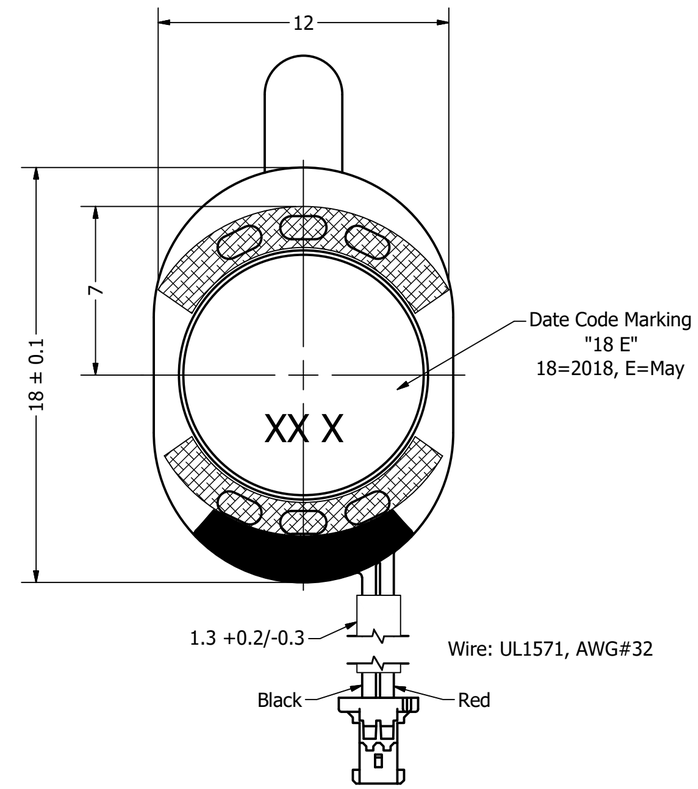

Connector: Molex 51146-0200 or equivalent

Items	Specifications	Conditions
Sound Pressure Level	90	dB (@ 10cm), Avg.
Resonant Frequency	850	Hz
Frequency Range	600 ~ 10,000	Hz
Nominal Power	0.5	W
Max. Power	0.8	W
Impedance	8	Ω
Cone Material	Mylar	
Mount Type	Flush Mount	
Storage Temperature	-40 ~ +80	°C
Operating Temperature	-30 ~ +70	°C
Weight	1.6	g

REVISION HISTORY

REV	DESCRIPTION	DATE	APPROVED
	Released from Engineering	10/21/2013	J.S.
1	Updated SPL, power, weight, freq range, drawing	5/15/2018	C.E.

NOTES

1) All dimensions are in mm unless otherwise noted

2) All tolerances are ± 0.5 mm unless otherwise noted

3) All parts meet RoHS

4) Subject to change or redrawn without notice