## SIDE VIEW

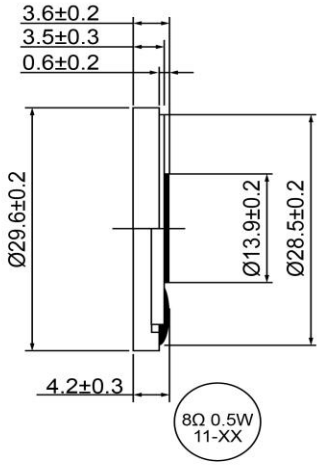


## BOTTOM VIEW

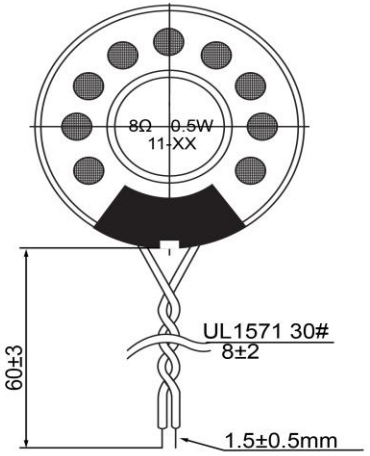


| Specifications | | |
|---|---|---|
| **Description** | **Value** | **Unit** |
| Shape | Round | |
| Resonant Frequency | 450 | (Hz) |
| Frequency Range | 450 ~ 5,000 | (Hz) |
| SPL @ 10cm | 92 | (dBA) |
| Impedance | 8 | (Ohm) |
| Cone Material | Mylar | |
| Nominal Power | 0.5 | (W) |
| Max Power | 0.8 | (W) |
| Mount Type | Flush Mount | |
| Operating Temperature | -40 ~ +66 | °C |
| Storage Temperature | -40 ~ +66 | °C |
| Weight | 3.5 | (g) |

**Notes**

1) All dimensions are in mm unless otherwise noted
2) All parts meet RoHS

DB UNLIMITED

**Dynamic Speaker**

| Revision History | | | | | |
|---|---|---|---|---|---|
| **Version** | **Description** | | | **Date** | **Approved** |
| 1 | Released from Engineering | | | 10/21/2013 | J.S |
| 2 | Updated SPL | | | 11/2/2015 | S.P |
| | | | | | |
| | | | | | |
| | | | | | |
| | | | | | |
| | | | | | |
| | | | | | |
| **Drawn by** | **Date** | **Checked by** | **Date** | **Approved by** | **Date** |
| A.B. | 10/21/2013 | C.E. | 10/21/2013 | J.S | 10/21/2013 |

**SM290408-1**

sales@dbunlimitedco.com | www.dbunlimitedco.com
©2013, DB Unlimited