TOP VIEW

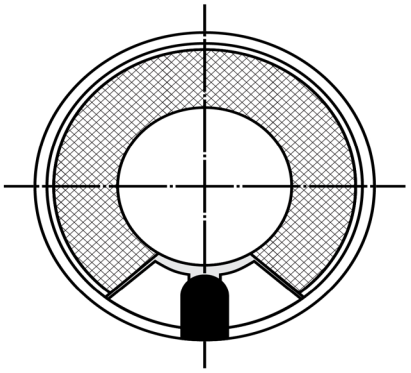

SIDE VIEW

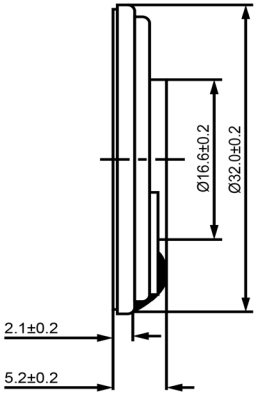

Specifications		
Description	**Value**	**Unit**
Shape	Round	
Resonant Frequency	668	(Hz)
Frequency Range	668 ~ 9,000	(Hz)
SPL @ 10cm	92	(dBA)
Impedance	32	(Ohm)
Cone Material	Mylar	
Nominal Power	0.5	(W)
Max Power	1	(W)
Mount Type	Flush	
Operating Temperature	-40 ~ +85	°C
Storage Temperature	-40 ~ +85	°C
Weight	7.95	(g)

Notes

1) All dimensions are in mm unless otherwise noted
2) All parts meet RoHS

DB UNLIMITED

High Temp Dynamic Speaker

Revision History

Version	Description	Date	Approved
1	Released from Engineering	10/21/2013	J.S

Drawn by	Date	Checked by	Date	Approved by	Date
A.B.	10/21/2013	C.E.	10/21/2013	J.S	10/21/2013

SM320632-1

sales@dbunlimitedco.com | www.dbunlimitedco.com
©2013, DB Unlimited