SIDE VIEW

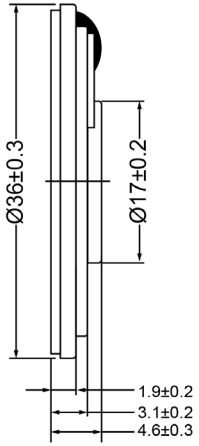

BOTTOM VIEW

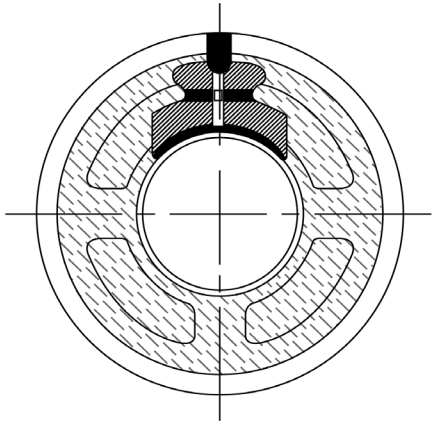

Specifications		
Description	**Value**	**Unit**
Shape	Round	
Resonant Frequency	550	(Hz)
Frequency Range	550 ~ 6,500	(Hz)
SPL @ 10cm	104	(dBA)
Impedance	8	(Ohm)
Cone Material	Mylar	
Nominal Power	1	(W)
Max Power	1.5	(W)
Mount Type	Flush Mount	
Operating Temperature	-40 ~ +66	°C
Storage Temperature	-40 ~ +66	°C
Weight	8	(g)

Notes

1) All dimensions are in mm unless otherwise noted
2) All parts meet RoHS

DB UNLIMITED

Dynamic Speaker

Revision History					
Version	**Description**		**Date**	**Approved**	
1	Released from Engineering		10/21/2013	J.S	
Drawn by	**Date**	**Checked by**	**Date**	**Approved by**	**Date**
A.B.	10/21/2013	C.E.	10/21/2013	J.S	10/21/2013

SM360508-3

sales@dbunlimitedco.com | www.dbunlimitedco.com
©2013, DB Unlimited