TOP VIEW

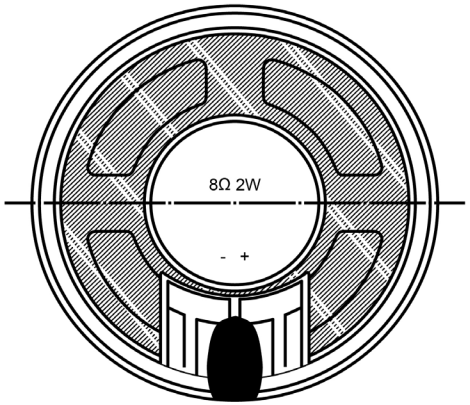

SIDE VIEW

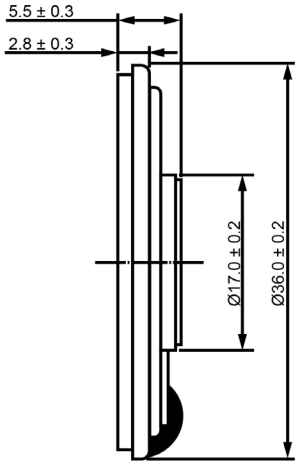

Specifications		
Description	**Value**	**Unit**
Shape	Round	
Resonant Frequency	650	(Hz)
Frequency Range	650 ~ 8,000	(Hz)
SPL @ 10cm	94	(dBA)
Impedance	8	(Ohm)
Cone Material	Mylar	
Nominal Power	2	(W)
Max Power	3	(W)
Mount Type	Flush Mount	
Operating Temperature	- 25 ~ + 60	°C
Storage Temperature	- 25 ~ + 60	°C
Weight	8.3	(g)

Notes

1) All dimensions are in mm unless otherwise noted
2) All parts meet RoHS

DB UNLIMITED

Dynamic Speaker

Revision History

Version	Description	Date	Approved
1	Released from Engineering	2/10/2014	J.S

Drawn by	Date	Checked by	Date	Approved by	Date
A.B.	10/21/2013	C.E.	10/21/2013	J.S	2/10/2014

SM360608-1

sales@dbunlimitedco.com | www.dbunlimitedco.com
©2013, DB Unlimited