## TOP VIEW

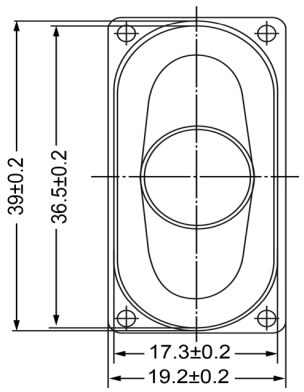


## SIDE VIEW

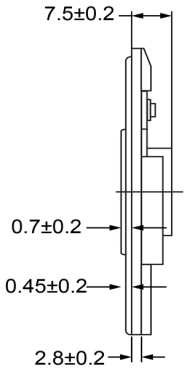


## BOTTOM VIEW

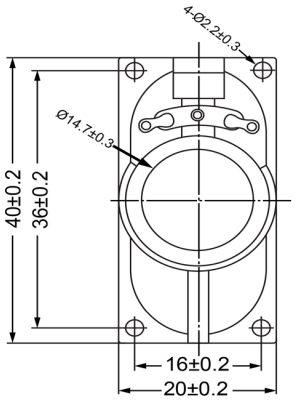


| Specifications | | |
|---|---|---|
| **Description** | **Value** | **Unit** |
| Shape | Oval | |
| Resonant Frequency | 600 | (Hz) |
| Frequency Range | 600 ~ 20,000 | (Hz) |
| SPL @ 10cm | 90 | (dBA) |
| Impedance | 16 | (Ohm) |
| Cone Material | Mylar | |
| Nominal Power | 0.25 | (W) |
| Max Power | 0.5 | (W) |
| Mount Type | Frame | |
| Operating Temperature | -25 ~ +55 | °C |
| Storage Temperature | -25 ~ +55 | °C |
| Weight | 6.3 | (g) |

**Notes**

1) All dimensions are in mm unless otherwise noted
2) All parts meet RoHS

DB UNLIMITED

**Dynamic Speaker**

**Revision History**

| Version | Description | Date | Approved |
|---|---|---|---|
| 1 | Released from Engineering | 10/21/2013 | J.S |
| | | | |
| | | | |
| | | | |
| | | | |
| | | | |
| | | | |
| | | | |

| Drawn by | Date | Checked by | Date | Approved by | Date |
|---|---|---|---|---|---|
| A.B. | 10/21/2013 | C.E. | 10/21/2013 | J.S | 10/21/2013 |

**SM400616-1**

Additional considerations can be found at www.dbunlimitedco.com/technical-articles.


©2013, DB Unlimited