TOP VIEW

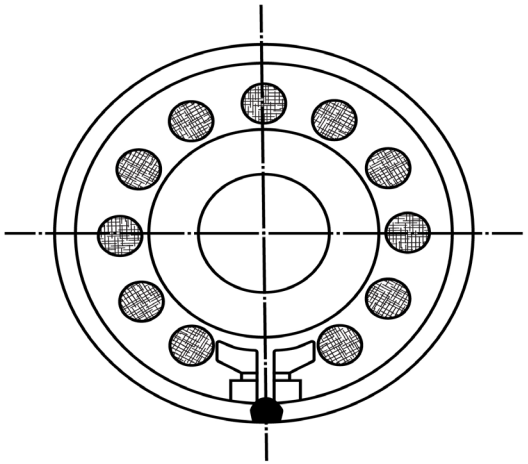

SIDE VIEW

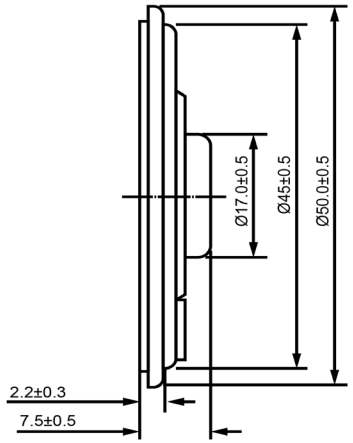

Specifications		
Description	**Value**	**Unit**
Shape	Round	
Resonant Frequency	500	(Hz)
Frequency Range	500 ~ 12,000	(Hz)
SPL @ 10cm	94	(dBA)
Impedance	50	(Ohm)
Cone Material	Mylar	
Nominal Power	0.5	(W)
Max Power	1	(W)
Mount Type	Flush Mount	
Operating Temperature	-25 ~ +55	°C
Storage Temperature	-25 ~ +55	°C
Weight	12	(g)

Notes

1) All dimensions are in mm unless otherwise noted
2) All parts meet RoHS

DB UNLIMITED

Dynamic Speaker

Revision History					
Version	**Description**			**Date**	**Approved**
1	Released from Engineering			2/5/2014	J.S.
Drawn by	**Date**	**Checked by**	**Date**	**Approved by**	**Date**
G.W.	1/27/2014	C.E.	2/4/2014	J.S.	2/5/2014

SM500550-1

sales@dbunlimitedco.com | www.dbunlimitedco.com
©2014, DB Unlimited