DB UNLIMITED

| Part Number: | DRAWN | |
|---|---|---|
| SP1200308-1 | CJ | 4/10/2016 |
| | CHECKED | |
| | P.D. | 4/11/2016 |
| Description: | APPROVED | |
| Dynamic Speaker | J.S. | 4/11/2016 |

This document contains data proprietary to DB Unlimited. Any use or reproduction, in any form, without prior written permission of DB Unlimited is prohibited. All terms and conditions can be found at www.dbunlimitedco.com

## Top View

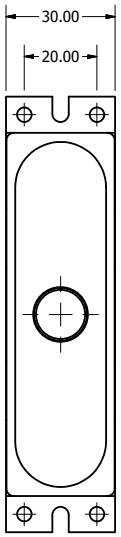


## Side View

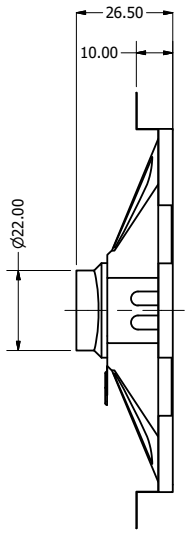


## Bottom View

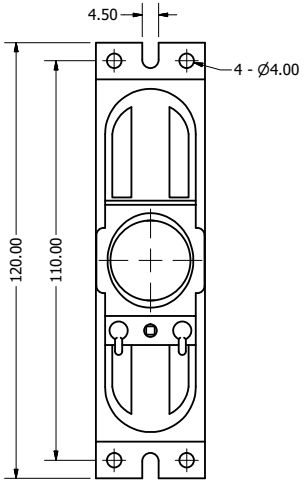


| Items | Specifications | Conditions |
|---|---|---|
| Sound Pressure Level | 97 | dB (@ 10cm) |
| Resonant Frequency | 320 | Hz |
| Frequency Range | 320 ~ 7,000 | Hz |
| Nominal Power | 5 | W |
| Max. Power | 8 | W |
| Impedance | 8 | Ω |
| Cone Material | Paper | |
| Mount Type | Frame Mount | |
| Storage Temperature | -25 ~ +55 | ℃ |
| Operating Temperature | -25 ~ +55 | ℃ |
| Weight | 41 | g |

REVISION HISTORY

| REV | DESCRIPTION | DATE | APPROVED |
|---|---|---|---|
| | Released from Engineering | 10/21/2013 | J.S. |
| 1 | Updated to new template | 4/11/2016 | J.S. |
| 2 | Corrected SPL | 5/22/2017 | C.E. |

NOTES

1) All dimensions are in mm unless otherwise noted
2) All tolerances are ± 0.5 mm unless otherwise noted
3) All parts meet RoHS
4) Subject to change or redrawn without notice

Additional considerations can be found at www.dbunlimitedco.com/technical-articles.