SIDE VIEW

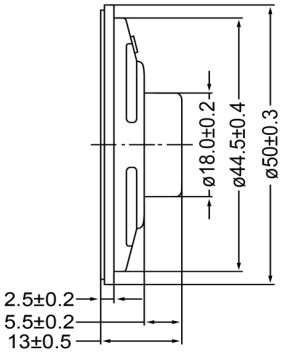

BOTTOM VIEW

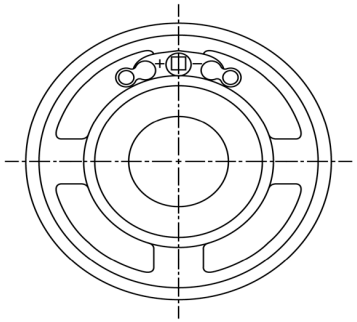

Specifications		
Description	**Value**	**Unit**
Shape	Round	
Resonant Frequency	360	(Hz)
Frequency Range	360 ~ 4,000	(Hz)
SPL @ 10cm	106	(dBA)
Impedance	50	(Ohm)
Cone Material	Paper	
Nominal Power	0.25	(W)
Max Power	0.5	(W)
Mount Type	Flush	
Operating Temperature	-10 ~ +40	°C
Storage Temperature	-25 ~ +55	°C
Weight	20	(g)

Notes

1) All dimensions are in mm unless otherwise noted
2) All parts meet RoHS

DB UNLIMITED

Dynamic Speaker

Revision History					
Version	**Description**			**Date**	**Approved**
1	Released from Engineering			10/21/2013	J.S
Drawn by	**Date**	**Checked by**	**Date**	**Approved by**	**Date**
A.B.	10/21/2013	C.E.	10/21/2013	J.S	10/21/2013

SP500350-1

Additional considerations can be found at www.dbunlimitedco.com/technical-articles.

©2013, DB Unlimited