DB UNLIMITED

Part Number:		
SP500432-1	DRAWN: CJ	12/20/2017
	CHECKED: P.D.	12/20/2017
Description: Dynamic Speaker	APPROVED: C.E.	12/20/2017

This document contains data proprietary to DB Unlimited. Any use or reproduction, in any form, without prior written permission of DB Unlimited is prohibited. All terms and conditions can be found at www.dbunlimitedco.com

Top View

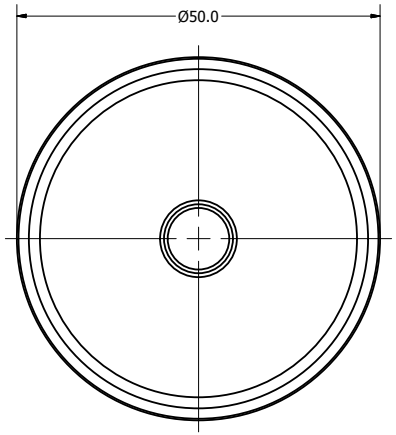

Side View

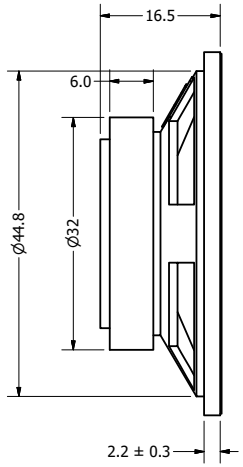

Bottom View

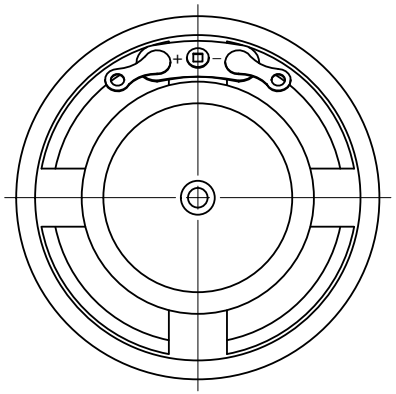

Items	Specifications	Conditions
Sound Pressure Level	97	dB (@ 10cm)
Resonant Frequency	400	Hz
Frequency Range	400 ~ 5,000	Hz
Nominal Power	0.25	W
Max. Power	0.5	W
Impedance	32	Ω
Cone Material	Paper	
Mount Type	Flush Mount	
Storage Temperature	-25 ~ +55	°C
Operating Temperature	-25 ~ +55	°C
Weight	46	g

REVISION HISTORY

REV	DESCRIPTION	DATE	APPROVED
	Released from Engineering	10/21/2013	J.S.
1	Updated to new template, updated SPL	12/20/2017	C.E.

NOTES

1) All dimensions are in mm unless otherwise noted
2) All tolerances are ± 0.5 mm unless otherwise noted
3) All parts meet RoHS
4) Subject to change or redrawn without notice

Additional considerations can be found at www.dbunlimitedco.com/technical-articles.