SIDE VIEW

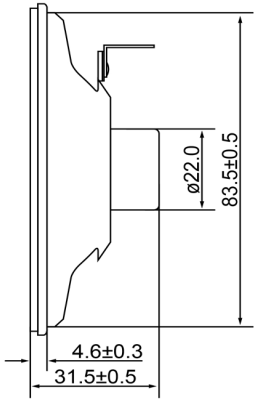

BOTTOM VIEW

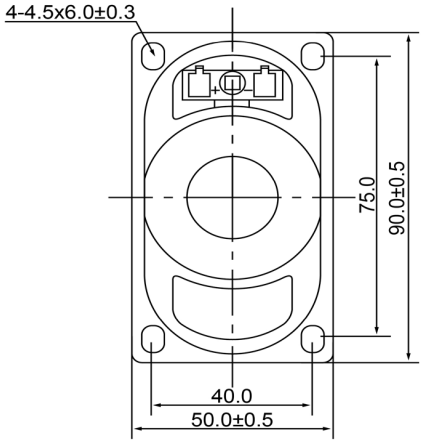

Specifications		
Description	**Value**	**Unit**
Shape	Rectangle	
Resonant Frequency	200	(Hz)
Frequency Range	200 ~ 20,000	(Hz)
SPL @ 10cm	80	(dBA)
Impedance	16	(Ohm)
Cone Material	Paper	
Nominal Power	3	(W)
Max Power	5	(W)
Mount Type	Frame	
Operating Temperature	-20 ~ +55	°C
Storage Temperature	-20 ~ +55	°C
Weight	57	(g)

Notes

1) All dimensions are in mm unless otherwise noted
2) All parts meet RoHS

DB UNLIMITED

Dynamic Speaker

Revision History

Version	Description	Date	Approved
1	Released from Engineering	10/21/2013	J.S

Drawn by	Date	Checked by	Date	Approved by	Date
A.B.	10/21/2013	C.E.	10/21/2013	J.S	10/21/2013

SP900216-1

Additional considerations can be found at www.dbunlimitedco.com/technical-articles.

©2013, DB Unlimited