TOP VIEW

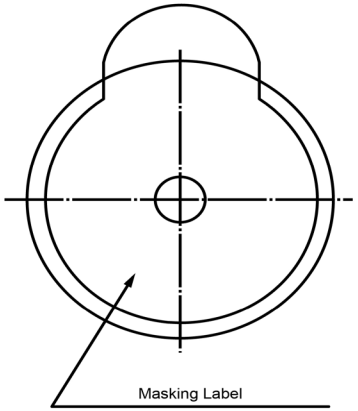

SIDE VIEW (1)

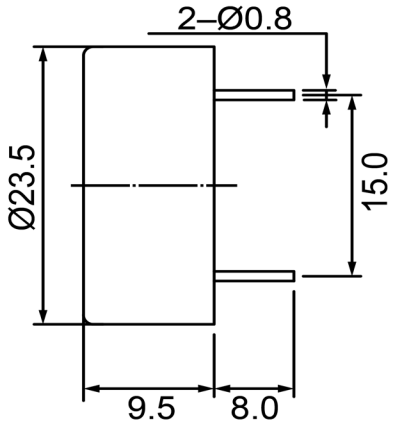

SIDE VIEW (2)

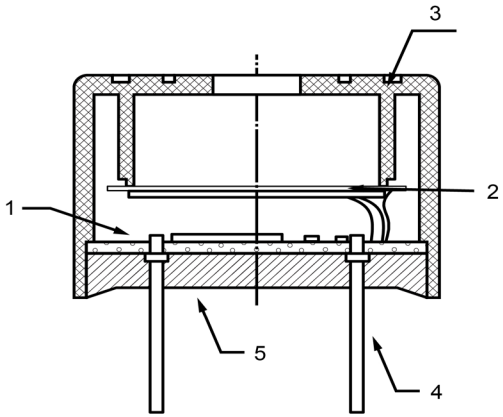

Specifications		
Description	**Value**	**Unit**
Technology	Piezo	
Resonant Frequency	3,400	(Hz)
Rated Voltage	12	(V)
SPL @ 10cm	95	(dBA)
Mount Type	Thru Hole	
Voltage Range	3 ~ 20	(V)
Max Rated Current	10	(mA)
Housing Material	NORYL	
Operating Temperature	-20 ~ +70	°C
Storage Temperature	-30 ~ +80	°C
Weight	3	(g)

Notes

1) All dimensions are in mm unless otherwise noted
2) All parts meet RoHS

DB UNLIMITED

Revision History

Version	Description	Date	Approved
1	Released from Engineering	10/21/2013	J.S

Drawn by	Date	Checked by	Date	Approved by	Date
A.B.	10/21/2013	C.E.	10/21/2013	J.S	10/21/2013

Piezo Transducer

TP233412-1

sales@dbunlimitedco.com | www.dbunlimitedco.com
©2013, DB Unlimited