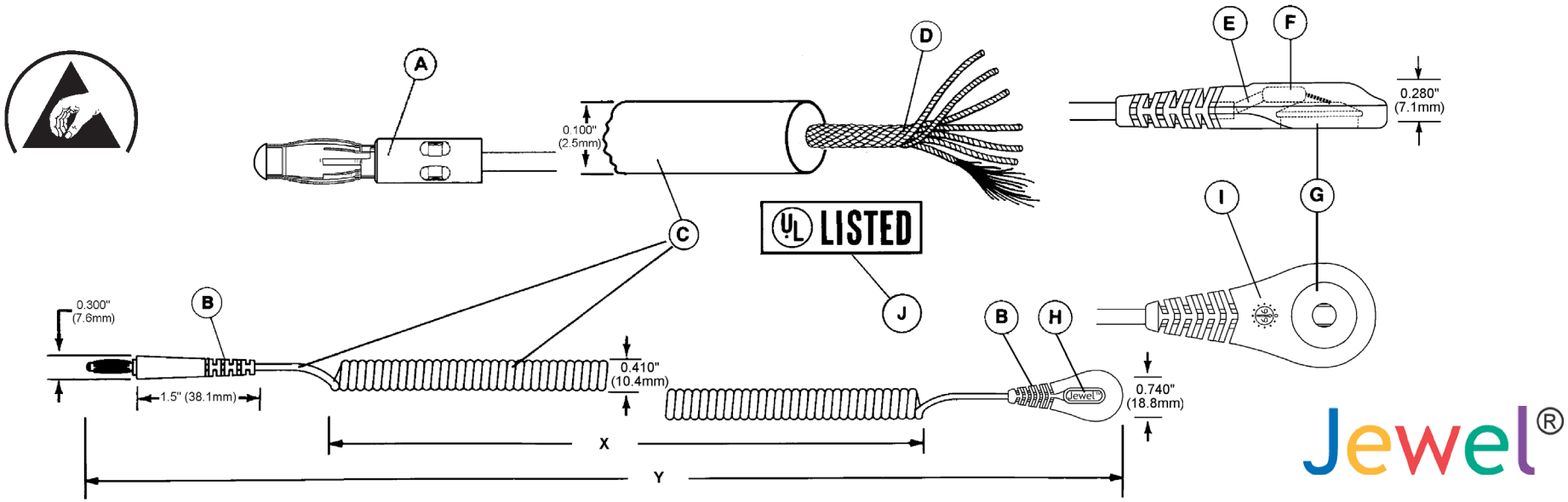

A. Barrel type banana plug with machined contour spring support. Crimped uniformly from 4 sides for maximum strength. Fits industry standard banana jack ≥.157". Per ANSI/ESD S1.1 Section 5.4, will maintain greater than 1 pound, less than five pound breakaway force requirement over the life of the cord.

B. Thermoplastic elastomer strain relief molded on. Flex life average >50,000,000 cycles (per ANSI/ESD S1.1 Bending Life Test, greatly exceeding the 16,000 average cycle requirement). Break load average 30 pounds.

C. Polyurethane wire insulation. Rapid retraction coil cord compresses length with resulting benefit of less tangling and dragging along work surface. Break load average 30 pounds.

D. Single T-3161 tinsel conductor. Consisting of 7 strands of polyester wrapped with copper. High flex life. Equivalent is 29 gauge (cir mil and/or ohms).

E. Autosplice brass crimp secures conductors to resistor lead and provides stress relief for resistor.

F. One megohm ±5%, 1/4 watt, series resistor limits current. (Per ANSI/ESD S1.1 Annex B1. Current-Limiting Resistance)

G. Spring loaded 4mm medical snap socket. Spring separation .125" - .165". Provides 1-5 pound breakaway from .160" snap stud (ANSI/ESD S1.1). Compatible with most major brands.

H. Jewel® logo molded in compliance with ANSI/ESD S1.1.

I. Date coded with date of manufacture.

J. Underwriters Laboratory Listing 90P1C when used with Desco wristbands.

Item	Color	Retracted Length		Extended Length	
		X	Y	Nominal	Max
09120	Sapphire	10"	27"	6'	8.5'
09218	White	10"	27"	6'	8.5'
*09228	White	10"	27"	6'	8.5'
09121	Sapphire	16"	32"	10'	13'
09219	White	16"	32"	10'	13'
*09229	White	16"	32"	10'	13'

*Cleaned and Packaged in a Class 1000 Controlled Environment. Click **HERE** for details.

Jewel® Lifetime Limited Warranty
Desco expressly warrants that for a period of 1 year from the date of purchase, Desco Jewel® Wrist Straps and Coil Cords will be free of defects in material (parts) and workmanship (labor). In addition, normal use will not cause Coil Cord resistor strain relief connection or Wrist Band 4 mm snap stud to wear sufficiently to open path-to-ground circuit. Within the lifetime warranty period, a credit for purchase of replacement Desco Jewel® products, or, at Desco's option, the Desco Jewel® product will be repaired or replaced free of charge. If product credit is issued, the amount will be calculated based upon the original invoice purchase price.

Made in the
United States of America

See drawing 09105 for wristband specifications.

JEWEL® COIL CORDS

DESCO WEST: 3651 WALNUT AVE., CHINO, CA 91710 WEB SITE: Desco.com
PHONE (909) 627-8178 FAX (909) 627-7449

DESCO EAST: ONE COLGATE WAY, CANTON, MA 02021-1407
PHONE (781) 821-8370 FAX (781) 575-0172

DRAWING NUMBER 09120

DATE: March 2018

© 2018 DESCO INDUSTRIES INC
Employee Owned