5mm
LED CBI® Circuit Board Indicator
(DIN 41494 Compatible), Single

Dialight

550-xx12

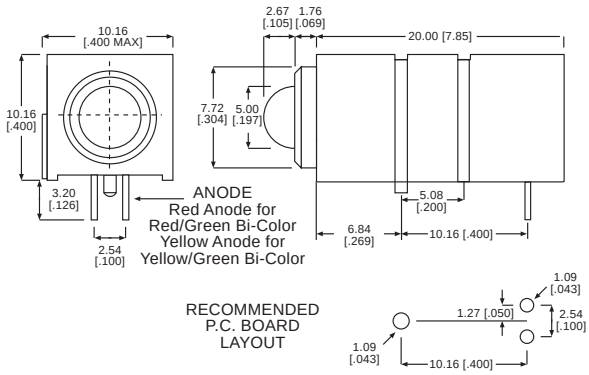

Dimensions in mm [inches]

Standard Polarity shown in drawing: Anode right

PART NO.	COLOR
INTEGRAL RESISTOR, 5 VOLTS	
550-0512	Red
550-0712	Green
550-0812	Yellow
LOW CURRENT	
550-1112	Red
550-1212	Yellow
550-1312	Green
HIGH EFFICIENCY	
550-2212	Green
550-2312	Yellow
550-2412	Red
550-2512	Orange
BI-COLOR	
550-3012	Red/Green
550-3112	Yellow/Green NEW

To order any of the 550-xx12 part numbers with Reverse Polarity (Anode Left), please add -010 to the part numbers shown above.

Features

- DIN 41494 compatible
- Multiple CBIs form horizontal LED arrays on 10.16mm (0.400") center-lines.
- High Contrast, UL 94 V-0 rated, black housing
- Oxygen index: 32%
- Polymer content: PBT, 2.242 g
- Housing stand-offs facilitate PCB cleaning
- Solderability per MIL-STD-202F, method 208F
- LEDs are safe for direct viewing per IEC 825-1, EN-60825-1

Custom

- For custom LEDs contact factory.

Tolerance note: As noted, otherwise:

- LED Protrusion: ±0.04 mm [±0.016]
- CBI Housing: ±0.02mm[±0.008]

PART NUMBER ORDERING CODE

5 5 0 – x x 1 2 – 0 1 0

Series	LED Type	Reverse Polarity Option 1) Anode left

–010 Ordering Code Suffix required ONLY for Reverse Polarity Option

Typical Operating Characteristics (T_A=25°C)

See LED data sheet for additional information

INTEGRAL RESISTOR, 5 VOLTS

See page 6-55 and 6-56 for Reference Only LED Drive Circuit Examples. See page 6-57 for Pin Out

Part Number	Color	Peak Wavelength nm	I_V mcd	Test Voltage	Forward Current (mA)	Viewing Angle $2\theta_{½}$	LED Data sheet	Page #
550-0512	Red	655	2	5	13	60°	5RD-9422	6-52
550-0712	Green	565	8	5	12	60°	5RD-9423	6-52
550-0812	Yellow	583	8	5	10	60°	521-9284	6-41

LOW CURRENT

Part Number	Color	Peak Wavelength nm	I_V mcd	V_F Volts	Test Current (mA)	Viewing Angle $2\theta_{½}$	LED Data sheet	Page #
550-1112	Red	635	2	1.8	2	50°	521-9320	6-42
550-1212	Yellow	583	1.8	1.9	2	50°	521-9321	6-42
550-1312	Green	565	1.8	1.8	2	50°	521-9327	6-42

HIGH EFFICIENCY

Part Number	Color	Peak Wavelength nm	I_V mcd	V_F Volts	Test Current (mA)	Viewing Angle $2\theta_{½}$	LED Data sheet	Page #
550-2212	Green	563	10	2.1	10	65°	5HD-9270-5	6-49
550-2312	Yellow	585	6.3	2.1	10	50°	5HD-9271-5	6-49
550-2412	Red	650	7	2.2	10	50°	5HD-9269	6-49
550-2512	Orange	600	7	1.9	10	60°	521-9704	6-43

BI-COLOR

Part Number	Color	Peak Wavelength nm	I_V mcd	V_F Volts	Test Current (mA)	Viewing Angle $2\theta_{½}$	LED Data sheet	Page #
550-3012	Red/Green	660/565	90/40	1.8/2.1	20	60°	521-9651	6-46
550-3112	Yellow/Green	585/565	8.7/8.7	2.1/2.1	20	50°	521-9724	6-46

5mm Discrete LED
Integral Resistor, 5 Volts
Diffused

Dialight

521-9183, -9284

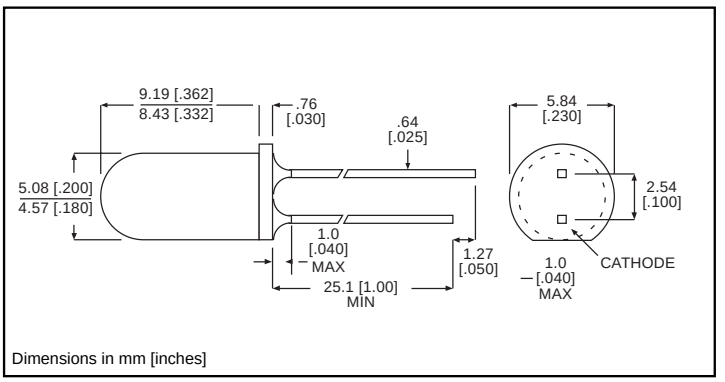

Dimensions in mm [inches]

PART NO.	LED COLOR
521-9183	Red
521-9284	Yellow

MOUNTING CLIP: 515-0004
located on page 6-48

ABSOLUTE MAXIMUM RATINGS (T_A=25°C)	Red **-9183**	Yellow **-9284**
Forward Voltage (V)	7.5	7.5
Derating (V/°C) From 50°C	.071	.071
Operating Temperature (°C)	-40/+85	-40/+85
Storage Temperature (°C)	-55/+100	-55/+100
Soldering Temperature	260°C, 5 seconds, 1.6 mm from case	

Solder Adherence per MIL-STD-202E, Method 208C

OPERATING CHARACTERISTICS (T_A=25°C)		Red **-9183**	Yellow **-9284**
Luminous Intensity (mcd)	Min.	2	2
V_F = 5V	Typical	8	8
Peak Wavelength (nm)	Typical	635	583
λ Peak			
Viewing Angle (2Θ ½)	Typical	60°	60°
Forward Current (I)	Typical	10	10
V_F = 5V	Max	15	15
Reverse Voltage (V), I_R=100µA	Min.	5	5

Θ ½ *is the off axis angle at which the luminous intensity is half the axial luminous intensity*

6

5mm Discrete LED
Low Current, 2mA
Diffused

Dialight

521-9320, -9321, -9327

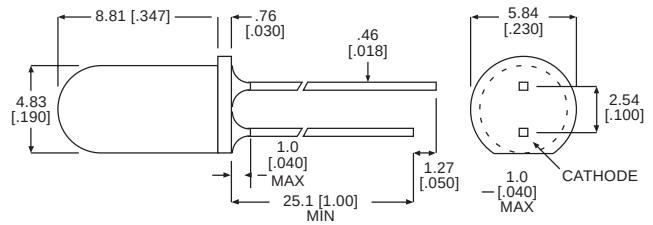

Dimensions in mm [inches]

PART NO.	COLOR
521-9320	Red
521-9321	Yellow
521-9327	Green

MOUNTING CLIP: 515-0004
located on page 6-48

ABSOLUTE MAXIMUM RATINGS (TA=25°C)	Red **-9320**	Yellow **-9321**	Green **-9327**
Power Dssipation (mW)	27	36	24
Derating (mA/°C) *From 92°C*	1	1	1
Forward Current (mA)	7	7	7
Peak Current (mA) *Pulse width = 10 µs*	500	500	500
Operating Temperature (°C)	-55/+100	-55/+100	-55/+100
Storage Temperature (°C)	-55/+100	-55/+100	-55/+100
Soldering Temperature	260°C, 5 seconds, 1.6 mm from case		

Solder Adherence per MIL-STD-202E, Method 208C

OPERATING CHARACTERISTICS (TA=25°C)		Red **-9320**	Yellow **-9321**	Green **-9327**
Luminous Intensity (mcd)	Min.	1.2	1.2	1.2
I_F=2mA	Typical	2	1.8	1.8
Peak Wavelength (nm) λ Peak	Typical	635	583	565
Viewing Angle ($2\Theta_{1/2}$)	Typical	50°	50°	50°
Forward Voltage (V)	Typical	1.8	1.9	1.8
I_F=2mA	Max.	2.2	2.7	2.2
Reverse Voltage (V), I_R=50µA	Min.	5	5	5

$\Theta_{1/2}$ *is the off axis angle at which the luminous intensity is half the axial luminous intensity*

5mm Discrete LED
High Efficiency
Diffused

521-9246, -9248, -9250, -9704

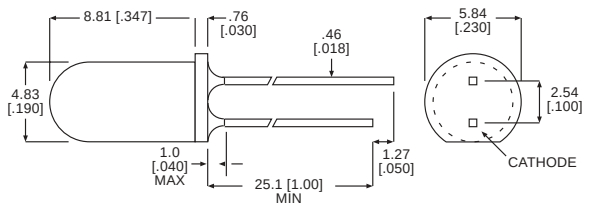

Dimensions in mm [inches]

PART NO.	COLOR
521-9246	Red
521-9248	Yellow
521-9250	Green
521-9704	Orange

MOUNTING CLIP: 515-0004
located on page 6-48

ABSOLUTE MAXIMUM RATINGS (T_A=25°C)	Red **-9246**	Yellow **-9248**	Green **-9250**	Orange **-9704**
Power Dissipation (mW)	135	85	135	135
Derating (mW/°C) *From 25°C 1. (mA/°C) From 50°C*	1.8	1.6	1.8	.5[1]
Forward Current (mA)	25	20	25	30
Peak Current (mA) *Pulse width = 10µs*	500	500	500	500
Operating Temperature (°C)	-55/+100	-55/+100	-20/+100	-55/+100
Storage Temperature (°C)	-55/+100	-55/+100	-55/+100	-55/+100
Soldering Temperature	260°C, 5 seconds, 1.6 mm from case			

Solder Adherence per MIL-STD-202E, Method 208C

OPERATING CHARACTERISTICS (T_A=25°C)		Red **-9246**	Yellow **-9248**	Green **-9250**	Orange **-9704**
Luminous Intensity (mcd)	Min.	4	4	4.2	4
I_F=10mA	Typical	7	8	5.2	7
Peak Wavelength (nm) λ Peak	Typical	635	583	565	600
Viewing Angle (2Θ ½)	Typical	60°	60°	60°	60°
Forward Voltage (V)	Typical	2.2	2.2	2.3	1.9
I_F=10mA	Max.	3	3	3	2.4
Reverse Voltage (V), I_R=100µA	Min.	5	5	5	5

Θ ½ *is the off axis angle at which the luminous intensity is half the axial luminous intensity*

6

5mm Discrete LED
Bi-Color
Non-Tinted, Diffused

Dialight

521-9651, -9724

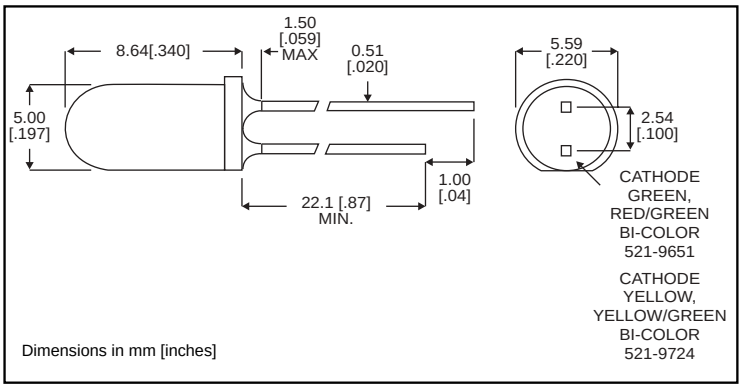

Dimensions in mm [inches]

PART NO.	LED COLOR
521-9651	Red/Green
521-9724	Yellow/Green

MOUNTING CLIP: 515-0005
located on page 6-48

ABSOLUTE MAXIMUM RATINGS (T_A=25°C)	Red/Green **-9651**	Yellow/Green **-9724**
Power Dissipation (mW)	100/100	60/100
Forward Current (mA)	40/30	20/30
Derating (mA/°C) *From 50°C*	.5/.4	.25/.40
Peak Current (mA) *Pulse width = 100 µs*	200/120	80/120
Operating Temperature (°C)	-55/+100	-55/+100
Storage Temperature (°C)	-55/+100	-55/+100
Soldering Temperature	260°C, 5 seconds, 1.6 mm from case	

Solder Adherence per MIL-STD-202E, Method 208C

OPERATING CHARACTERISTICS (T_A=25°C)		Red/Green **-9651**	Yellow/Green **-9724**
Luminous Intensity (mcd)	Min.	29/12.6	2.5/2.5
I_F=20mA	Typical	90/40	8.7/8.7
Peak Wavelength (nm) λ Peak	Typical	660/565	585/565
Viewing Angle ($2\Theta_{1/2}$)	Typical	60°	50°
Forward Voltage (V)	Typical	1.8/2.1	2.1/2.1
I_F=20mA	Max.	2.4/2.8	2.8/2.8

$\Theta_{1/2}$ *is the off axis angle at which the luminous intensity is half the axial luminous intensity*

5mm
High Efficiency
Diffused

Dialight

5HD-xxxx

*** NOT A VALID PART NUMBER. THIS SHEET IS FOR REFERENCE ONLY.**

TYPE	COLOR
*5HD-9269	Red
*5HD-9270-2	Green
*5HD-9270-5	Green
*5HD-9271-2	Yellow
*5HD-9271-5	Yellow

ABSOLUTE MAXIMUM RATINGS (T_A=25°C)	Red **-9269**	Green **-9270-2**	Green **-9270-5**	Yellow **-9271-2**	Yellow **-9271-5**
Power Dissipation (mW)	60	140	75	200	60
Derating (mW/°C) *From 50°C 1. From 40°C*	.66[1]		.66[1]		.66[1]
Forward Current (mA)	20	40	25	60	20
Derating (mA/°C) *From 25°C*		.6		.8	
Peak Current (mA) *Pulse width = 1µs*	60	500	60	1000	60
Operating Temperature (°C)	-25/+85	-55/+100	-25/+85	-55/+100	-25/+85
Storage Temperature (°C)	-30/+100	-55/+100	-30/+100	-55/+100	-30/+100
Soldering Temperature	260°C, 5 seconds, 1.6 mm from case				

Solder Adherence per MIL-STD-202E, Method 208C

OPERATING CHARACTERISTICS (T_A=25°C)		Red **-9269**	Green **-9270-2**	Green **-9270-5**	Yellow **-9271-2**	Yellow **-9271-5**
Luminous Intensity (mcd)	Min.	2.2	4	3.6	4	2.2
I_F=10mA	Typical	7	32	10	10	6.3
Peak Wavelength (nm) λ Peak	Typical	650	565	563	590	585
Viewing Angle (2Θ ½)	Typical	50°	50°	65°	70°	50°
Forward Voltage (V)	Typical	2.2	2*	2.1	2.4*	2.1
I_F=10mA, *I_F=20mA	Max.	2.5	2.6*	3	3*	3
Reverse Voltage (V), I_R=100µA *I_R=10µA	Min.	5	5*	3*	5*	3

Θ ½ is the off axis angle at which the luminous intensity is half the axial luminous intensity

6

5mm
Integral Resistor
Diffused

Dialight

5RD-xxxx

*** NOT A VALID PART NUMBER. THIS SHEET IS FOR REFERENCE ONLY.**

TYPE	COLOR	VOLTS
*5RD-9378	Green	12
*5RD-9379	Yellow	12
*5RD-9422	Red	5
*5RD-9423	Green	5

ABSOLUTE MAXIMUM RATINGS (T_A=25°C)	Green 12V **-9378**	Yellow 12V **-9379**	Red 5V **-9422**	Green 5V **-9423**
Forward Voltage (V) *(T_A=70°C)	15*	15	7.5	7.5
Operating Temperature (°C)	-20/+85	-40/+85	-40/+85	-20/+85
Storage Temperature (°C)	-55/+100	-55/+100	-55/+100	-55/+100
Soldering Temperature	260°C, 5 seconds, 1.6 mm from case			

Solder Adherence per MIL-STD-202E, Method 208C

OPERATING CHARACTERISTICS (T_A=25°C)		Green 12V **-9378**	Yellow 12V **-9379**	Red 5V **-9422**	Green 5V **-9423**
Luminous Intensity (mcd)	Min.	1.5*	1.5*	1	2
V_F=5V, *V_F=12V	Typical	4*	4*	2	8
Peak Wavelength (nm) λ Peak	Typical	565	583	655	565
Viewing Angle (2Θ ½)	Typical	60°	60°	60°	60°
Forward Current (mA), V_F=5V	Typical	13*	13*	13	12
*V_F=12V	Max.	20*	20*	20	15
Reverse Voltage (V), I_R=100µA	Typical	5	5	5	5

Θ ½ is the off axis angle at which the luminous intensity is half the axial luminous intensity