3mm
LED CBI® Circuit Board Indicator
.200" High LED Centerline

Dialight

551-xx07

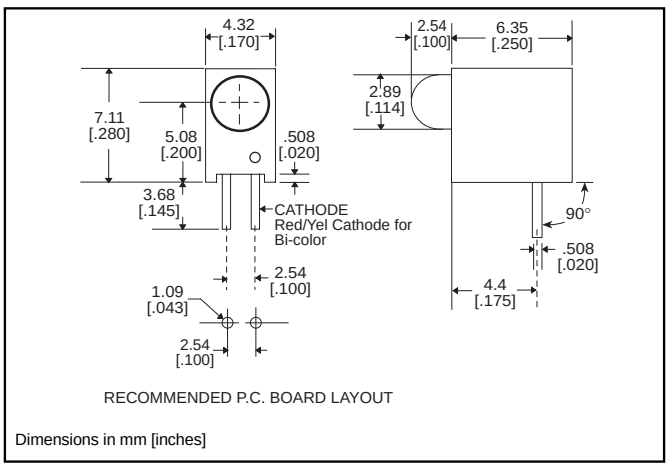

RECOMMENDED P.C. BOARD LAYOUT

Dimensions in mm [inches]

Standard Polarity shown in drawing: Cathode right

PART NO.	COLOR
HIGH EFFICIENCY	
551-0207	Green
551-0307	Yellow
551-0407	Red
551-0807	Blue[3] NEW
551-2507	Orange
INTEGRAL RESISTOR, 5 VOLTS	
551-0507	Red
551-0607	Green
551-0707	Yellow
LOW CURRENT	
551-1107	Red
551-1207	Yellow
551-1307	Green
BI-COLOR	
551-3007	Red/Green
551-3107	Yellow/Green

To order any of the 551-xx07 part numbers with Reverse Polarity (Cathode Left), please add -010 to the part numbers shown above.

4

Features

- Multiple CBIs form horizontal LED arrays on 4.45mm (0.175") center-lines
- High Contrast, UL 94 V-0 rated, black housing
- Oxygen index: 31.5%
- Polymer content: PBT, 0.188 g
- Housing stand-offs facilitate PCB cleaning
- Solderability per MIL-STD-202F, method 208F
- LEDs are safe for direct viewing per IEC 825-1, EN-60825-1
- Compatible with:
  551-xx07-004 QuadBlock

Tolerance note: As noted, otherwise:

- LED Protrusion: ±0.04 mm [±0.016]
- CBI Housing: ±0.02mm[±0.008]

PART NUMBER ORDERING CODE

5 5 1	–	x x 0 7	–	0 1 0
Series		LED Type		Reverse Polarity Option 1) Cathode Left

3

ATTENTION
OBSERVE PRECAUTIONS
FOR HANDLING
ELECTROSTATIC
SENSITIVE
DEVICES

–010 Ordering Code Suffix required ONLY for Reverse Polarity Option

Typical Operating Characteristics (T_A=25°C)

See LED data sheet for additional information

See page 4-70 and 4-71 for Reference Only LED Drive Circuit Examples. See page 4-72 for Pin Out

HIGH EFFICIENCY

Part Number	Color	Peak Wavelength nm	I_V mcd	V_F Volts	Test Current (mA)	Viewing Angle $2\theta_{½}$	LED Data sheet	Page #
551-0207	Green	563	16	2.1	10	45°	521-9408	4-64
551-0307	Yellow	585	6.3	2.1	10	45°	521-9428	4-64
551-0407	Red	650	10	2	10	45°	521-9427	4-64
551-0807	Blue	428	12	3.5	10	70°	521-9831	4-57
551-2507	Orange	600	7	2.2	10	60°	521-9498	4-58

INTEGRAL RESISTOR, 5 VOLTS

Part Number	Color	Peak Wavelength nm	I_V mcd	Test Voltage	Forward Current (mA)	Viewing Angle $2\theta_{½}$	LED Data sheet	Page #
551-0507	Red	635	29	5	10	60°	521-9215	4-59
551-0607	Green	565	19	5	10	60°	521-9323	4-59
551-0707	Yellow	585	12.6	5	10	60°	521-9322	4-59

LOW CURRENT

Part Number	Color	Peak Wavelength nm	I_V mcd	V_F Volts	Test Current (mA)	Viewing Angle $2\theta_{½}$	LED Data sheet	Page #
551-1107	Red	635	1.6	1.7	2	60°	521-9324	4-60
551-1207	Yellow	585	1.6	1.8	2	60°	521-9325	4-60
551-1307	Green	565	1.6	1.9	2	60°	521-9326	4-60

BI-COLOR

Part Number	Color	Peak Wavelength nm	I_V mcd	V_F Volts	Test Current (mA)	Viewing Angle $2\theta_{½}$	LED Data sheet	Page #
551-3007	Red/Green	635/565	4.7/10	2/2.1	10	50°	521-9459	4-63
551-3107	Yellow/Green	585/565	4.3/6.3	2.1*/2.1*	10	80°	521-9478	4-62

** I_F = 20mA*

3mm Discrete LED
Tinted, Diffused

NEW

Dialight

521-9831

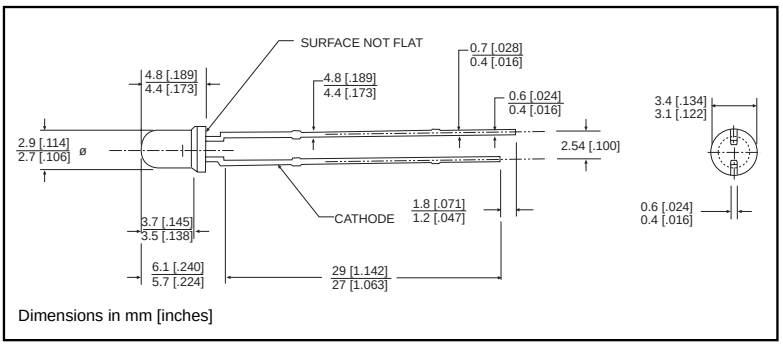

Dimensions in mm [inches]

PART NO.	COLOR
521-9831	Blue [3]

MOUNTING CLIP: 515-0006
located on page 4-65

[3]



ATTENTION
OBSERVE PRECAUTIONS
FOR HANDLING
ELECTROSTATIC
SENSITIVE
DEVICES

4

ABSOLUTE MAXIMUM RATINGS (T_A=25°C)	Blue **-9831**
Power Dissipation (mW)	100
Forward Current (mA)	20
Derating (mA/°C) *From 55°C*	.44
Operating Temperature (°C)	-40/+100
Storage Temperature (°C)	-40/+100
Soldering Temperature	260°C, 5 seconds, 1.6 mm from case

Solder Adherence per MIL-STD-202E, Method 208C

OPERATING CHARACTERISTICS (T_A=25°C)		Blue **-9831**
Luminous Intensity (mcd)	Min.	6.3
I_F=10mA	Typical	12
Peak Wavelength (nm)	Typical	428
λ Peak		
Viewing Angle (2Θ½)	Typical	70°
Forward Voltage (V)	Typical	3.5
I_F=10mA	Max.	4.2
Reverse Voltage (V) IR=10µA	Min.	3

Θ½ is the off axis angle at which the luminous intensity is half the axial luminous intensity

3mm Discrete LED
High Efficiency
Diffused 521-9210, -9211, -9216, -9498, -9636

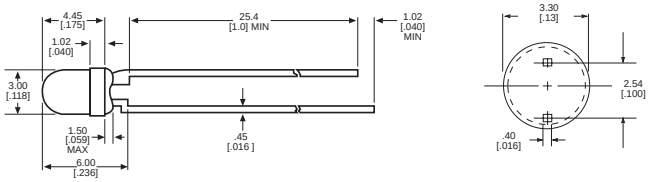

short lead cathode all colors except 521-9636 Red.
For 521-9636 Red, short lead is anode.

Dimensions in mm [inches]

PART NO.	COLOR
521-9210	Green
521-9211	Yellow
521-9216	Red
521-9498	Orange
521-9636	Red

NEW

MOUNTING CLIP: 515-0006
located on page 4-65

ABSOLUTE MAXIMUM RATINGS (T_A=25°C)	Green **-9210**	Yellow **-9211**	Red **-9216**	Orange **-9498**	Red **-9636**
Power Dissipation (mW)	100	60	100	135	100
Forward Current (mA)	30	20	30	25	40
Derating (mA/°C) *From 50°C* [1] from 25°C	.4	.25	.4	.5	.5[1]
Operating Temperature (°C)	-55/+100	-55/+100	-55/+100	-55/+100	-55/+100
Storage Temperature (°C)	-55/+100	-55/+100	-55/+100	-55/+100	-55/+100
Soldering Temperature	260°C, 5 seconds, 1.6 mm from body				

Solder Adherence per MIL-STD-202E, Method 208C

OPERATING CHARACTERISTICS (T_A=25°C)		Green **-9210**	Yellow **-9211**	Red **-9216**	Orange **-9498**	Red **-9636**
Luminous Intensity (mcd)	Min.	4.7	7.4	7.4	3.4	8.7[1]
I_F=10mA [1] I_F=20mA	Typical	12.6	10	10	7	48[1]
Peak Wavelength (nm) λ Peak	Typical	565	585	635	600	660
Viewing Angle (2Θ ½)	Typical	60°	60°	60°	60°	60°
Forward Voltage (V)	Typical	2.1[1]	2.1[1]	2[1]	2.2	1.8[1]
I_F=10mA [1] I_F=20mA	Max.	2.8[1]	2.8[1]	2.8[1]	3	2.4[1]
Reverse Voltage (V), I_R=100µA	Max.	5	5	5	5	4

Θ ½ *is the off axis angle at which the luminous intensity is half the axial luminous intensity*

3mm Discrete LED
Integral Resistor, 5V
Diffused

Dialight

521-9215, -9322, -9323

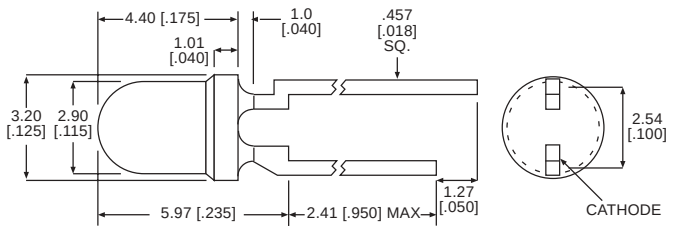

Dimensions in mm [inches]

PART NO.	COLOR
521-9215	Red
521-9322	Yellow
521-9323	Green

MOUNTING CLIP: 515-0006
located on page 4-65

ABSOLUTE MAXIMUM RATINGS (T_A=25°C)	Red **-9215**	Yellow **-9322**	Green **-9323**
Forward Voltage (V)	7.5	7.5	7.5
Derating (V/°C) *From 50°C*	.086	.086	.071
Operating Temperature (°C)	-40/+85	-40/+85	-20/+85
Storage Temperature (°C)	-55/+100	-55/+100	-55/+100
Soldering Temperature	260°C, 5 seconds, 1.6 mm from case		

Solder Adherence per MIL-STD-202E, Method 208C

OPERATING CHARACTERISTICS (T_A=25°C)		Red **-9215**	Yellow **-9322**	Green **-9323**
Luminous Intensity (mcd)	Min.	8.7	3.7	5.6
V_F=5V	Typical	29	12.6	19
Peak Wavelength (nm)	Typical	635	585	565
λ Peak				
Viewing Angle (2Θ½)	Typical	60°	60°	60°
Forward Current (mA)	Typical	10	10	10
V_F=5V	Max.	20	20	20
Reverse Voltage (V), I_R=100µA	Min.	5	5	5

Θ½ *is the off axis angle at which the luminous intensity is half the axial luminous intensity*

3mm Discrete LED
Low Current
Diffused

521-9324, -9325, -9326

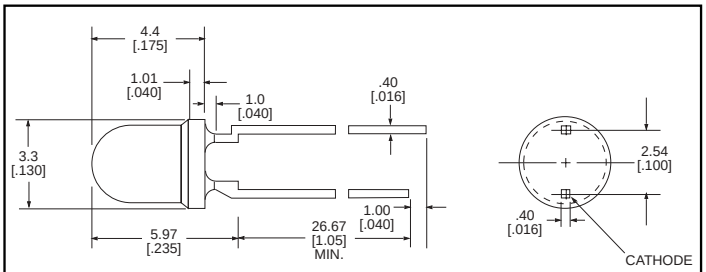

Dimensions in mm [inches]

PART NO.	COLOR
521-9324	Red
521-9325	Yellow
521-9326	Green

MOUNTING CLIP: 515-0006
located on page 4-65

ABSOLUTE MAXIMUM RATINGS (T_A=25°C)	Red **-9324**	Yellow **-9325**	Green **-9326**
Power Dissipation (mW)	20	20	20
Forward Current (mA)	7	7	7
Derating (mA/°C) *From 90°C*	.7	.7	.7
Peak Current (mA) *Pulse width = 10 µs*	500	500	500
Operating Temperature (°C)	-55/+100	-55/+100	-55/+100
Storage Temperature (°C)	-55/+100	-55/+100	-55/+100
Soldering Temperature	260°C, 5 seconds, 1.6 mm from case		

Solder Adherence per MIL-STD-202E, Method 208C

OPERATING CHARACTERISTICS (T_A=25°C)		Red **-9324**	Yellow **-9325**	Green **-9326**
Luminous Intensity (mcd)	Min.	1	1	1
I_F=2mA	Typical	1.6	1.6	1.6
Peak Wavelength (nm) λ Peak	Typical	635	585	565
Viewing Angle (2Θ ½)	Typical	60°	60°	60°
Forward Voltage (V)	Typical	1.7	1.8	1.9
I_F=2mA	Max.	2.2	2.7	2.2
Reverse Voltage (V), I_R=50µA	Min.	5	5	5

Θ ½ *is the off axis angle at which the luminous intensity is half the axial luminous intensity*

3mm Discrete LED
Bi-Color
Non-Tinted, Diffused

Dialight

521-9478, -9628, -9768

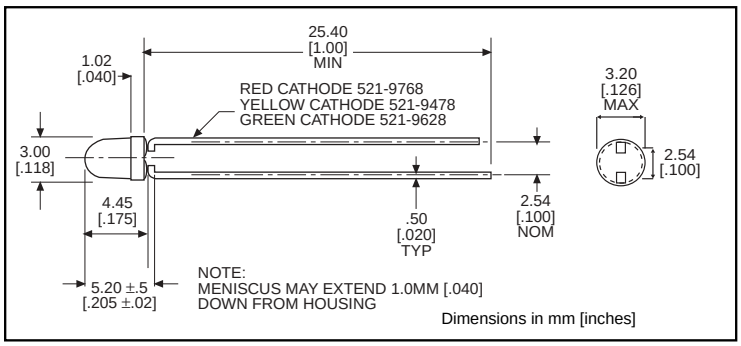

PART NO.	COLOR
521-9478	Yellow/Green
521-9628	Red/Green
521-9768	Red/Yellow

MOUNTING CLIP: 515-0006
located on page 4-65

ABSOLUTE MAXIMUM RATINGS (T_A=25°C)	Yellow/Green **-9478**	Red/Green **-9628**	Red/Yellow **-9768**
Power Dissipation (mW)	60/100	140/100	100/60
Forward Current (mA)	20/30	40/30	30/20
Derating (mA/°C) *From 25°C [1] From 50°C*	.25[1]/.40[1]	.5/.4	.4[1]/.25[1]
Peak Current (mA) *Pulse width = 10µs*	80/120	200/120	120/80
Operating Temperature (°C)	-55/+100	-55/+100	-55/+100
Storage Temperature (°C)	-55/+100	-55/+100	-55/+100
Soldering Temperature	260°C, 5 seconds, 1.66 mm from case		

Solder Adherence per MIL-STD-202E, Method 208C

OPERATING CHARACTERISTICS (T_A=25°C)		Yellow/Green **-9478**	Red/Green **-9628**	Red/Yellow **-9768**
Luminous Intensity (mcd)	Min.	2.5/2.5	3.7*/1.1*	1.7*/1.7*
I_F=10mA * I_F=20mA	Typical	4.3/6.3	12.6*/3.7*	5.6*/5.6*
Peak Wavelength (nm) λ Peak	Typical	585/565	660/565	630/585
Viewing Angle (2Θ ½)	Typical	80°	200°	80°
Forward Voltage (V)	Typical	2.1/2.1	1.8/2.1	2/2.1
I_F=20mA	Max.	2.8/2.8	2.4/2.8	2.8/2.8
Reverse Voltage (V) I_R=100ua	Min.	5	5	5

Θ ½ is the off axis angle at which the luminous intensity is half the axial luminous intensity

3mm Discrete LED
Bi-Color
Non-Tinted, Diffused

Dialight

521-9459

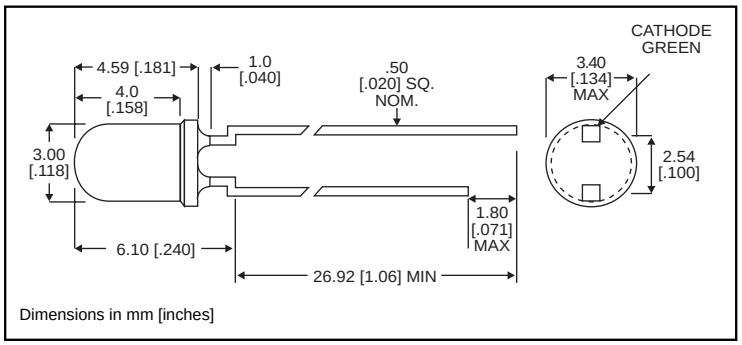

Dimensions in mm [inches]

PART NO.	COLOR
521-9459	Red/Green

MOUNTING CLIP: 515-0006
located on page 4-65

4

ABSOLUTE MAXIMUM RATINGS (T_A=25°C)	Red/Green **-9459**
Power Dissipation (mW)	140
Forward Current (mA)	45
Derating (mA/°C) *From 25°C*	.6
Peak Current (mA) *Pulse width = 10µs*	1000
Operating Temperature (°C)	-55/+100
Storage Temperature (°C)	-55/+100
Soldering Temperature	260°C, 5 seconds, 1.6 mm from case

Solder Adherence per MIL-STD-202E, Method 208C

OPERATING CHARACTERISTICS (T_A=25°C)		Red/Green **-9459**
Luminous Intensity (mcd)	Min.	2.5/3.7
I_F=10mA	Typical	4.7/10
Peak Wavelength (nm)	Typical	635/565
λ Peak		
Viewing Angle (2Θ½)	Typical	50°
Forward Voltage (V)	Typical	2/2.1
I_F=10mA	Max.	2.8/2.8

Θ ½ is the off axis angle at which the luminous intensity is half the axial luminous intensity

3mm Discrete LED
High Efficiency
Diffused

Dialight

521-94xx

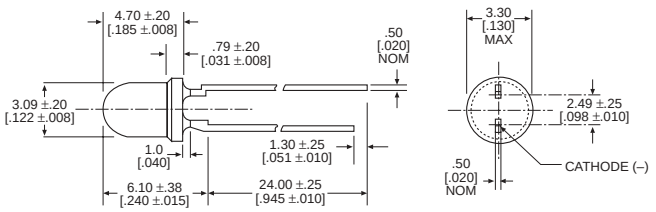

Dimensions in mm [inches]

TYPE	COLOR
521-9408	Green
521-9427	Red
521-9428	Yellow

MOUNTING CLIP: 515-0006
located on page 4-65

ABSOLUTE MAXIMUM RATINGS (T_A=25°C)	Green **-9408**	Red **-9427**	Yellow **-9428**
Power Dissipation (mW)	75	60	60
Forward Current (mA)	25	20	20
Derating (mA/°C) *From 50°C*	.5	.5	.5
Peak Current (mA)	60	60	60
Operating Temperature (°C)	-25/+85	-25/+85	-25/+85
Storage Temperature (°C)	-30/+100	-30/+100	-30/+100
Soldering Temperature	260°C, 5 seconds, 1.6 mm from case		

Solder Adherence per MIL-STD-202E, Method 208C

OPERATING CHARACTERISTICS (T_A=25°C)		Green **-9408**	Red **-9427**	Yellow **-9428**
Luminous Intensity (mcd)	Min.	5.6	3.6	2.2
I_F=10mA	Typical	16	10	6.3
Peak Wavelength (nm)	Typical	563	650	585
λ Peak				
Viewing Angle ($2\Theta_{1/2}$)	Typical	45°	45°	45°
Forward Voltage (V)	Typical	2.1	2	2.1
I_F=10mA	Max.	3	3	3
Reverse Voltage (V), I_R=10µA	Min.	3	3	3

$\Theta_{1/2}$ *is the off axis angle at which the luminous intensity is half the axial luminous intensity*