| DIALIGHT PART NO. | LED COLOR (nm) |
|---|---|
| 597-3001-602F,607F | RED (630) |
| 597-3041-602F,607F | RED ORANGE (615) |
| 597-3201-602F,607F | ORANGE (605) |
| 597-3501-602F,607F | YELLOW GREEN (570) |
| 597-3401-602F,607F | YELLOW (590) |
| 597-3321-602F,607F | GREEN (525) |
| 597-3601-602F,607F | BLUE (470) |

| REV | REVISIONS | DRN | APP | DATE |
|---|---|---|---|---|
| A | NEW RELEASE | LD | NO | 9-24-19 |

ATTENTION:
OBSERVE PRECAUTIONS FOR HANDLING ELECTROSTATIC SENSITIVE DEVICES

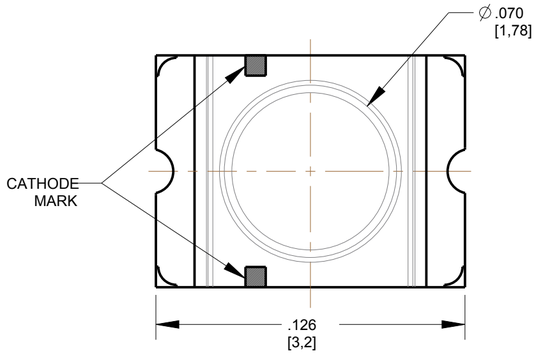


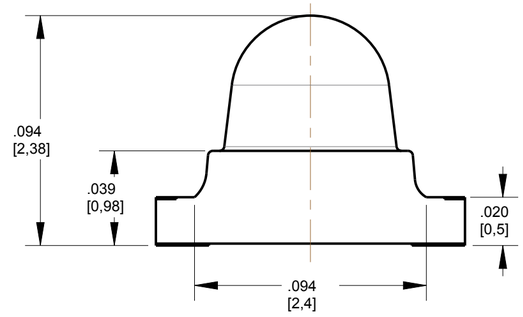


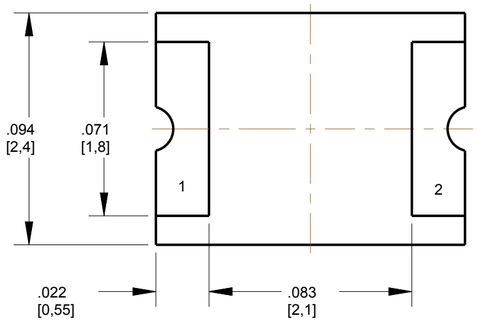


## TAPING SPECIFICATIONS

UNITS: mm
TOLERANCE (UNLESS OTHERWISE SPECIFIED): ±0.2mm

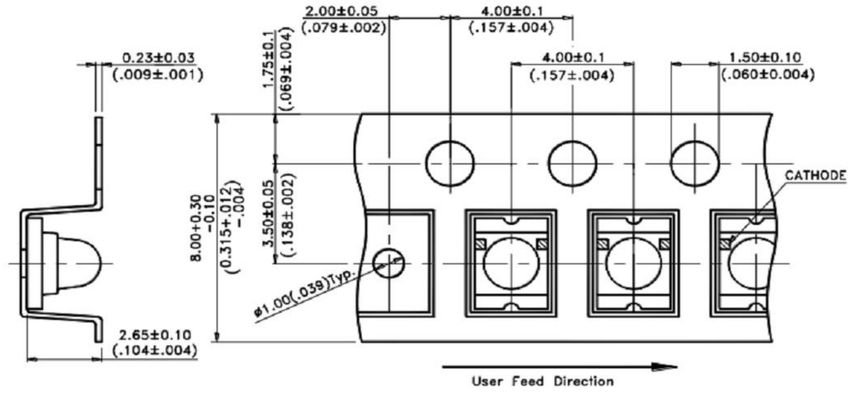


## RECOMMENDED RoHS SOLDER PROFILE

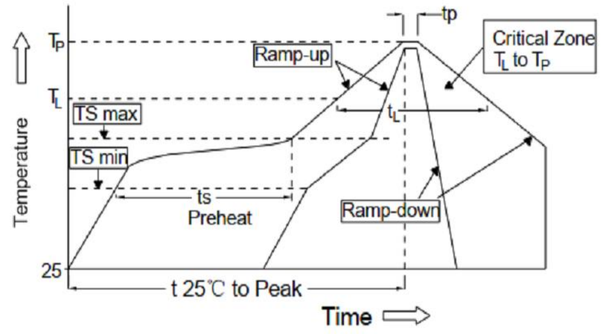


| ELECTRICAL OPTICAL CHARACTERISTICS AT 25 °C | | | | | | | | | | | | | |
|---|---|---|---|---|---|---|---|---|---|---|---|---|---|
| LED COLOR | TEST CONDITION | LUMINOUS INTENSITY (mcd) | | | PEAK EMISSION WAVELENGTH | DOMINANT WAVELENGTH (nm) | | | REVERSE CURRENT | SPECTRAL LINE HALF-WIDTH | FORWARD VOLTAGE $I_F$=20mA | | VIEWING ANGLE $I_F$=20mA |
| | IF (mA) | MIN. | TYP. | MAX. | TYP | MIN | TYP. | MAX | MAX | TYP | TYP. | MAX. | TYP |
| RED | 20 | 710 | 850 | 2800 | 639 | | 630 | | 10µA @ VR=5V | 20 | 2.0 | 2.4 | 25 |
| RED ORANGE | | 710 | 2605 | 4500 | 621 | | 615 | | | 18 | 2.0 | 2.4 | 25 |
| ORANGE | | 450 | 1200 | 4500 | 611 | 600 | 605 | 610 | | 17 | 2.0 | 2.4 | 25 |
| YELLOW GREEN | | 180 | 600 | 1800 | 574 | | 570 | | | 15 | 2.0 | 2.4 | 25 |
| YELLOW | | 450 | 710 | 1800 | 588 | 587 | 590 | 595 | | 15 | 2.0 | 2.4 | 25 |
| GREEN | | 710 | 2000 | 4500 | 530 | | 525 | | | 35 | 2.8 | 3.6 | 25 |
| BLUE | | 560 | 1400 | 2240 | 468 | 465 | 470 | 475 | | 25 | 3.4 | 3.8 | 25 |

| ABSOLUTE MAXIMUM RATINGS AT 25 °C | | | | | | | | |
|---|---|---|---|---|---|---|---|---|
| LED COLOR | POWER DISSIPATON (mW) | PEAK FORWARD CURRENT (mA) | FORWARD CURRENT (mA) | DERATING LINEAR FROM 25° C mA/° C | REVERSE VOLTAGE (V) | OPERATING TEMPRATURE (° C) | STORAGE TEMPRATURE (° C) | SOLDERING CONDITION (° C) |
| RED | 75 | 80 | 30 | 0.4 | 5 | -55 TO +85 | -55 TO +85 | 260 |
| RED ORANGE | 75 | 80 | 30 | 0.4 | | -30 TO +85 | -40 TO +85 | |
| ORANGE | 75 | 80 | 30 | 0.4 | | -55 TO +85 | -55 TO +85 | |
| YELLOW GREEN | 75 | 80 | 30 | 0.4 | | -55 TO +85 | -55 TO +85 | |
| YELLOW | 75 | 80 | 30 | 0.4 | | -55 TO +85 | -55 TO +85 | |
| GREEN | 76 | 100 | 20 | 0.25 | | -20 TO +80 | -30 TO +100 | |
| BLUE | 76 | 100 | 20 | 0.25 | | -20 TO +80 | -30 TO +100 | |

| MARK | DEFINITION | CONDITION |
|---|---|---|
| $TS_{max}$ | Maximum of pre-heating temperature | 200° C |
| $TS_{min}$ | Minimum of pre-heating temperature | 150° C |
| $T_s$ | Time form Tsmin to Tsmax | 60-120 sec |
| $T_L$ | Reference temperature | 217° C |
| $t_L$ | Retention time for TL | within 60s |
| $T_P$ | Peak Temperature | 260° C |
| $t_P$ | Time for peak temperature | within 10s |
| DTr/Dt | Temperature rising rate | under 3° C/sec |
| DTd/Dt | Temperature decreasing rate | under -3° C/sec |

## RECOMMENDED SOLDER PAD LAYOUT

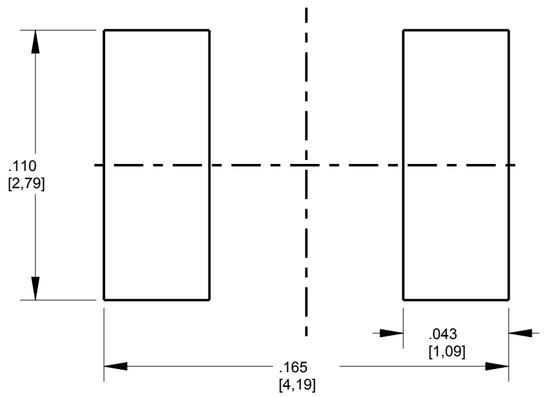





NOTES:

1. QUANTITY IS 1,500 PCS PER REEL.
2. PIN NUMBERS ARE FOR REFERENCE ONLY, DESIGNATION NON-EXISTENT ON PART.
3. THIS ASSEMBLY CONTAINS ELECTROSTATIC DISCHARGE SENSITIVE DEVICES (ESDS). MAINTAIN ALL PRECAUTIONARY MEASURES DURING ASSEMBLY, HANDLING AND STORAGE IN ACCORDANCE WITH IPC-A-610.
4. THIS PRODUCT IS RoHS COMPLIANT. EACH BAG IS TO BE MARKED WITH RoHS COMPLIANT LABEL OR EQUIVALENT MARKINGS. LED MUST BE Pb FREE.

THIS DRAWING AND THE CONTENTS HEREIN ARE CONFIDENTIAL AND THE SOLE PROPERTY OF DIALIGHT CORP. REPRODUCTION OF THIS DRAWING OR CONSTRUCTION OF ANY PARTS WITHIN THIS DRAWING ARE FORBIDDEN WITHOUT THE WRITTEN CONSENT OF DIALIGHT CORP.

DIALIGHT CORP INTERNAL REFERENCE ONLY = 3D MODEL : 4500521848X15-A.1

SCALE: 20.00
ALL DIM'S IN: INCHES (MM)
TOLERANCES:
UNLESS OTHERWISE SPECIFIED
FRACTIONS: ±1/64
DECIMALS (.XX): ±.01
DECIMALS (.XXX): ±.005
DECIMALS (.XXXX): ±.0005
ANGLES: ±1°
FINISH
FSCM 83330

DRAWING NUMBER: C18446
REV: A
TITLE: SM LED 1209 (3224)
MATERIAL

Dialight
1501 ROUTE 34 SOUTH
FARMINGDALE, NJ 07727
(732) 919-3119
www.dialight.com

SHEET 1 OF 1
FAMILY TABLE: