Dialight

656 Series
High Intensity LED Panel Mount Indicators



Certifications & Ratings

- UL1598: wire leads — UL listed; terminals — UL recognized
- NEMA 4X
- IP66/67
- RoHS compliant — w/ 6C exemption

Application

The 656 Series LED Panel Mount Indicators are designed for a variety of applications such as:

- Safety Applications
- Instrument Panels
- Vending/Gaming
- Display Lighting
- Transportation — rail, bus, airline

. . . and many more!

Dimensions

inches [mm]

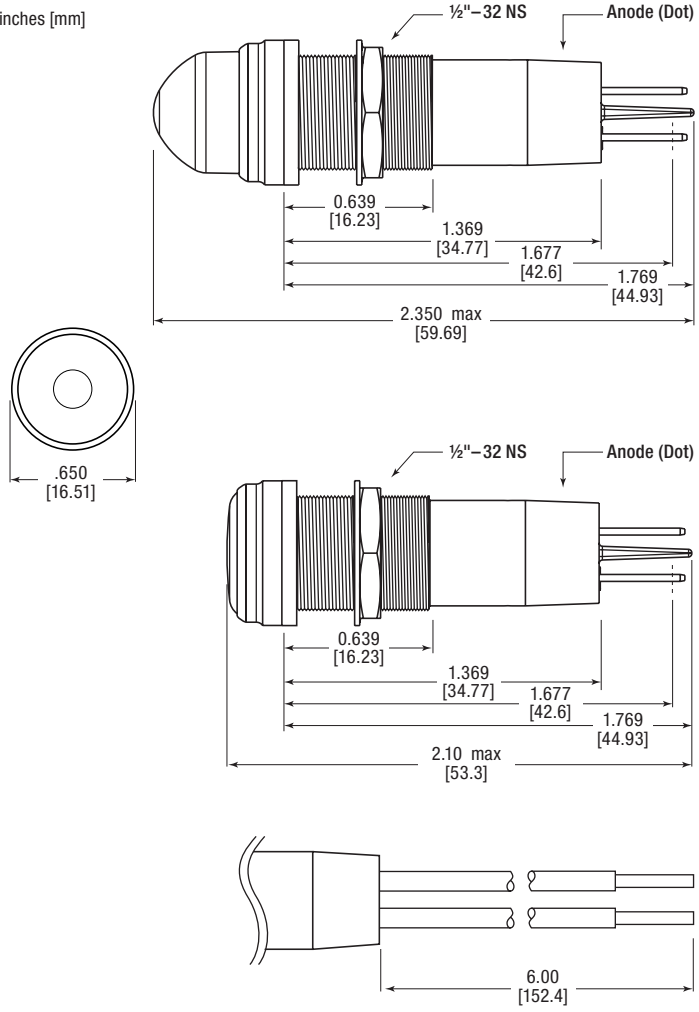

Mechanical information

Mounting Hole Size:	0.500" (12.7 mm)
Max Panel Thickness:	0.450" (11.43 mm)
Mounting Torque:	5 in-lbs

Specifications

Voltage Options:	5 to 125 V DC and 125, 230 V AC (bi-color 5, 12, 24 V DC) (no resistor required)
Operating Temp:	-30 °C to +85 °C (22 °F to +185 °F)
Storage Temp:	-40 °C to +100 °C (-40 °F to +212 °F)
Electrical Connection:	110 Faston quick connect terminals or 6" wire leads
Housing:	Brass—White or Black Nickel Plated
Lens Material:	Transparent polycarbonate (UL 94V-0)
Wire Leads:	18 AWG
Lock Washer:	Bronze—White or Black Nickel Plated
Nut:	Brass—White or Black Nickel Plated

RoHS COMPLIANT

Dialight

Ordering Information

656 Series

Part Number Guide

RoHS Compliant

6	5	6	-	X	X	X	X	-	X	0	X	F

Lens Style

Flat	1
Domed	3

Color

White	0	0
Red	1	0
Green	2	0
Yellow	3	0
Orange	3	5
Blue	4	0
Red Green	1	2
Yellow Green	3	2

Voltage

2	5 VDC
3	12 VDC
4	24 VDC
6	28 VDC*
8	37.5 VDC*
A	48 VDC*†◊
7	72 VDC*
5	120 VAC/DC*†
9	230 VAC*†

Plating

2	Black
3	White

Termination

3	Wires
4	Blades

* single color only
† white nickel plating only
◊ wire leads only

656 Series—Bi-Color

Flat Lens

Part #–with Wire Leads		Part #–with Blade Terminals		Color	Voltage (VDC)	Typ Current (mA)	Typical Intensity (mcd)
White Nickel Plating	Black Nickel Plating	White Nickel Plating	Black Nickel Plating				
656-1122-303F	656-1122-203F	656-1122-304F	656-1122-204F	Red Green	5	11/8	330/910
656-1322-303F	656-1322-203F	656-1322-304F	656-1322-204F	Yellow Green			320/864
656-1123-303F	656-1123-203F	656-1123-304F	656-1123-204F	Red Green	12	10/9	330/910
656-1323-303F	656-1323-203F	656-1323-304F	656-1323-204F	Yellow Green			320/864
656-1124-303F	656-1124-203F	656-1124-304F	656-1124-204F	Red Green	24	11/10	330/910
656-1324-303F	656-1324-203F	656-1324-304F	656-1324-204F	Yellow Green			320/864

Domed Lens

Part #–with Wire Leads		Part #–with Blade Terminals		Color	Voltage (VDC)	Typ Current (mA)	Typical Intensity (mcd)
White Nickel Plating	Black Nickel Plating	White Nickel Plating	Black Nickel Plating				
656-3122-303F	656-3122-203F	656-3122-304F	656-3122-204F	Red Green	5	11/8	490/1340
656-3322-303F	656-3322-203F	656-3322-304F	656-3322-204F	Yellow Green			480/430
656-3123-303F	656-3123-203F	656-3123-304F	656-3123-204F	Red Green	12	10/9	490/1340
656-3323-303F	656-3323-203F	656-3323-304F	656-3323-204F	Yellow Green			480/430
656-3124-303F	656-3124-203F	656-3124-304F	656-3124-204F	Red Green	24	11/10	490/1340
656-3324-303F	656-3324-203F	656-3324-304F	656-3324-204F	Yellow Green			480/430

Dialight

Ordering Information

656 Series—Single Color

Flat Lens

Part #–with Wire Leads		Part #–with Blade Terminals		Color	Voltage	Typ Current (mA)	Typical Intensity (mcd)
White Nickel Plating	Black Nickel Plating	White Nickel Plating	Black Nickel Plating				
656-1002-303F	656-1002-203F	656-1002-304F	656-1002-204F	White	5 (VDC)	15	1510
656-1102-303F	656-1102-203F	656-1102-304F	656-1102-204F	Red		16	1150
656-1202-303F	656-1202-203F	656-1202-304F	656-1202-204F	Green		15	1600
656-1302-303F	656-1302-203F	656-1302-304F	656-1302-204F	Yellow		16	990
656-1352-303F	656-1352-203F	656-1352-304F	656-1352-204F	Orange		16	1800
656-1402-303F	656-1402-203F	656-1402-304F	656-1402-204F	Blue		15	237
656-1003-303F	656-1003-203F	656-1003-304F	656-1003-204F	White	12 (VDC)	18	1310
656-1103-303F	656-1103-203F	656-1103-304F	656-1103-204F	Red		18	1100
656-1203-303F	656-1203-203F	656-1203-304F	656-1203-204F	Green		16	1140
656-1303-303F	656-1303-203F	656-1303-304F	656-1303-204F	Yellow		18	880
656-1353-303F	656-1353-203F	656-1353-304F	656-1353-204F	Orange		18	1800
656-1402-303F	656-1403-203F	656-1403-304F	656-1403-204F	Blue		16	290
656-1004-303F	656-1004-203F	656-1004-304F	656-1004-204F	White	24 (VDC)	20	1310
656-1104-303F	656-1104-203F	656-1104-304F	656-1104-204F	Red			1100
656-1204-303F	656-1204-203F	656-1204-304F	656-1204-204F	Green			1140
656-1304-303F	656-1304-203F	656-1304-304F	656-1304-204F	Yellow			880
656-1354-303F	656-1354-203F	656-1354-304F	656-1354-204F	Orange			1800
656-1404-303F	656-1404-203F	656-1404-304F	656-1404-204F	Blue			290
656-1006-303F	656-1006-203F	656-1006-304F	656-1006-204F	White	28 (VDC)	19	1310
656-1106-303F	656-1106-203F	656-1106-304F	656-1106-204F	Red		19	1100
656-1206-303F	656-1206-203F	656-1206-304F	656-1206-204F	Green		18	1140
656-1306-303F	656-1306-203F	656-1306-304F	656-1306-204F	Yellow		19	880
656-1356-303F	656-1356-203F	656-1356-304F	656-1356-204F	Orange		19	1800
656-1406-303F	656-1406-203F	656-1406-304F	656-1406-204F	Blue		18	290
656-1008-303F	656-1008-203F	656-1008-304F	656-1008-204F	White	37.5 (VDC)	8.5	400
656-1108-303F	656-1108-203F	656-1108-304F	656-1108-204F	Red			230
656-1208-303F	656-1208-203F	656-1208-304F	656-1208-204F	Green			450
656-1308-303F	656-1308-203F	656-1308-304F	656-1308-204F	Yellow			190
656-1358-303F	656-1358-203F	656-1358-304F	656-1358-204F	Orange			835
656-1408-303F	656-1408-203F	656-1408-304F	656-1408-204F	Blue			100
656-110A-303F	—	656-110A-304F	—	Red	48 (VDC)	10	230
656-120A-303F	—	656-120A-304F	—	Green			450
656-130A-303F	—	656-130A-304F	—	Yellow			190
656-1007-303F	656-1007-203F	656-1007-304F	656-1007-204F	White	72 (VDC)	8.5	400
656-1107-303F	656-1107-203F	656-1107-304F	656-1107-204F	Red			230
656-1207-303F	656-1207-203F	656-1207-304F	656-1207-204F	Green			450
656-1307-303F	656-1307-203F	656-1307-304F	656-1307-204F	Yellow			190
656-1357-303F	656-1357-203F	656-1357-304F	656-1357-204F	Orange			835
656-1407-303F	656-1407-203F	656-1407-304F	656-1407-204F	Blue			100
656-1005-303F	—	656-1005-304F	—	White	120 (VAC/ VDC)	5	400
656-1105-303F	—	656-1105-304F	—	Red			230
656-1205-303F	—	656-1205-304F	—	Green			450
656-1305-303F	—	656-1305-304F	—	Yellow			190
656-1355-303F	—	656-1355-304F	—	Orange			260
656-1405-303F	—	656-1405-304F	—	Blue			100
656-1009-303F	—	656-1009-304F	—	White	230 (VAC)	3	400
656-1109-303F	—	656-1109-304F	—	Red			230
656-1209-303F	—	656-1209-304F	—	Green			450
656-1309-303F	—	656-1309-304F	—	Yellow			190
656-1359-303F	—	656-1359-304F	—	Orange			260
656-1409-303F	—	656-1409-304F	—	Blue			100

Dialight

Domed Lens

Part #–with Wire Leads		Part #–with Blade Terminals		Color	Voltage	Typ Current (mA)	Typical Intensity (mcd)
White Nickel Plating	Black Nickel Plating	White Nickel Plating	Black Nickel Plating				
656-3002-303F	656-3002-203F	656-3002-304F	656-3002-204F	White	5 (VDC)	15	3080
656-3102-303F	656-3102-203F	656-3102-304F	656-3102-204F	Red		16	2200
656-3202-303F	656-3202-203F	656-3202-304F	656-3202-204F	Green		15	2880
656-3302-303F	656-3302-203F	656-3302-304F	656-3302-204F	Yellow		16	1960
656-3352-303F	656-3352-203F	656-3352-304F	656-3352-204F	Orange		16	4400
656-3402-303F	656-3402-203F	656-3402-304F	656-3402-204F	Blue		15	600
656-3003-303F	656-3003-203F	656-3003-304F	656-3003-204F	White	12 (VDC)	18	2340
656-3103-303F	656-3103-203F	656-3103-304F	656-3103-204F	Red		18	2000
656-3203-303F	656-3203-203F	656-3203-304F	656-3203-204F	Green		16	2110
656-3303-303F	656-3303-203F	656-3304-304F	656-3303-204F	Yellow		18	1080
656-3353-303F	656-3353-203F	656-3353-304F	656-3353-204F	Orange		18	4400
656-3403-303F	656-3403-203F	656-3403-304F	656-3403-204F	Blue		16	640
656-3004-303F	656-3004-203F	656-3004-304F	656-3004-204F	White	24 (VDC)	20	2340
656-3104-303F	656-3104-203F	656-3104-304F	656-3104-204F	Red			2000
656-3204-303F	656-3204-203F	656-3204-304F	656-3204-204F	Green			2110
656-3304-303F	656-3304-203F	656-3304-304F	656-3304-204F	Yellow			1080
656-3354-303F	656-3354-203F	656-3354-304F	656-3354-204F	Orange			4400
656-3404-303F	656-3404-203F	656-3404-304F	656-3404-204F	Blue			640
656-3006-303F	656-3006-203F	656-3006-304F	656-3006-204F	White	28 (VDC)	19	2340
656-3106-303F	656-3106-203F	656-3106-304F	656-3106-204F	Red		19	2000
656-3206-303F	656-3206-203F	656-3206-304F	656-3206-204F	Green		18	2110
656-3306-303F	656-3306-203F	656-3306-304F	656-3306-204F	Yellow		19	1080
656-3356-303F	656-3356-203F	656-3356-304F	656-3356-204F	Orange		19	4400
656-3406-303F	656-3406-203F	656-3406-304F	656-3406-204F	Blue		18	640
656-3008-303F	656-3008-203F	656-3008-304F	656-3008-204F	White	37.5 (VDC)		660
656-3108-303F	656-3108-203F	656-3108-304F	656-3108-204F	Red			410
656-3208-303F	656-3208-203F	656-3208-304F	656-3208-204F	Green			800
656-3308-303F	656-3308-203F	656-3308-304F	656-3308-204F	Yellow			390
656-3358-303F	656-3358-203F	656-3358-304F	656-3358-204F	Orange			2000
656-3408-303F	656-3408-203F	656-3408-304F	656-3408-204F	Blue			220
656-310A-303F	—	656-310A-304F	—	Red	48 (VDC)	10	410
656-320A-303F	—	656-320A-304F	—	Green			800
656-330A-303F	—	656-330A-304F	—	Yellow			390
656-3007-303F	656-3007-203F	656-3007-304F	656-3007-204F	White	72 (VDC)		660
656-3107-303F	656-3107-203F	656-3107-304F	656-3107-204F	Red			410
656-3207-303F	656-3207-203F	656-3207-304F	656-3207-204F	Green			800
656-3307-303F	656-3307-203F	656-3307-304F	656-3307-204F	Yellow			390
656-3357-303F	656-3357-203F	656-3357-304F	656-3357-204F	Orange			2000
656-3407-303F	656-3407-203F	656-3407-304F	656-3407-204F	Blue			220
656-3005-303F	—	656-3005-304F	—	White	120 (VAC/ VDC)	5	660
656-3105-303F	—	656-3105-304F	—	Red			410
656-3205-303F	—	656-3205-304F	—	Green			800
656-3305-303F	—	656-3305-304F	—	Yellow			390
656-3355-303F	—	656-3355-304F	—	Orange			610
656-3405-303F	—	656-3405-304F	—	Blue			220
656-3009-303F	—	656-3009-304F	—	White	230 (VAC)	3	660
656-3109-303F	—	656-3109-304F	—	Red			410
656-3209-303F	—	656-3209-304F	—	Green			800
656-3309-303F	—	656-3309-304F	—	Yellow			390
656-3359-303F	—	656-3359-304F	—	Orange			610
656-3409-303F	—	656-3409-304F	—	Blue			220

Dialight reserves the right to make changes at any time in order to supply the best product possible. The most current version of this document will always be available at: www.dialightsignalsandcomponents.com

Warranty Statement: Except for the warranty expressly provided for [herein/above/below], Dialight disclaims any and all other warranties, express or implied, including, without limitation, any warranties of merchantability, fitness for a particular purpose, title, and noninfringement.