677 Series
7 mm High Intensity Panel Mount Indicators



Certifications & Ratings

- RoHS compliant
- NEMA 4X (with gasket)
- IP66 (with gasket)

Application

The 677 Series LED Panel Mount Indicators are designed for a variety of applications such as:

- Main power indication
- Remote power indication
- Status indication
- Maintenance and warning indication
- Instrumentation

. . . and many more!

Dimensions

inches [mm]

Protruding

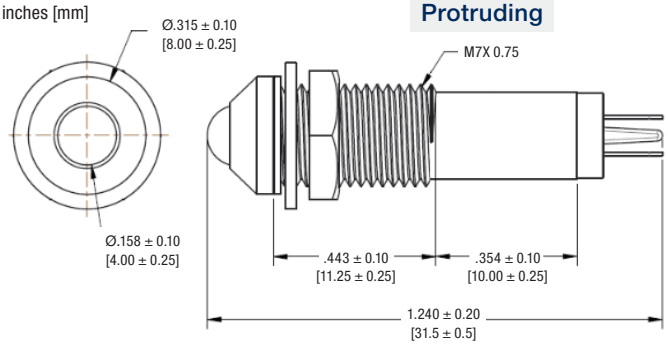

Recessed

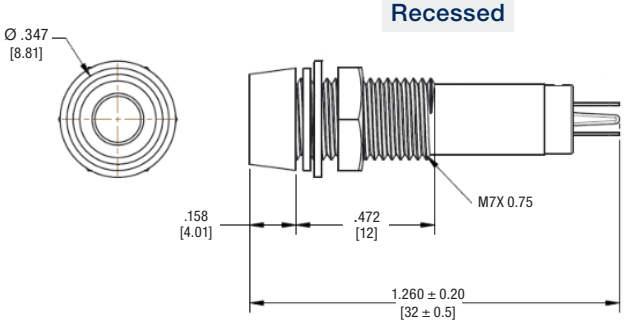

Internal

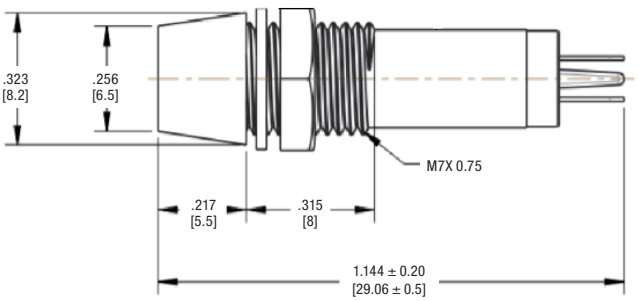

Mechanical Information

Mounting Hole Size:	0.283" (7.2 mm)
Max Panel Thickness:	See part numbers
Mounting Torque:	0.362 lbs/ft (5 kg/cm) 0.217 lbs/ft or 3 kg/cm (Figure 3)

Specifications

Voltage Options:	6, 12 & 24 VDC (no resistor required)
Operating Temp:	-20 °C to +75 °C (-4 °F to +167 °F)
Storage Temp:	-40 °C to +100 °C (-40 °F to +212 °F)
Electrical Connection:	Solder terminals and 6" wire leads
Housing:	Protruding position: Brass—Chrome or Black Plated Recessed position: Brass—Chrome Plated Internal position: Polycarbonate
Terminals:	Copper—Nickel Plated
Lock Washer:	Iron—Nickel Plated
Nut:	Brass—Nickel Plated

6" Wire Leads

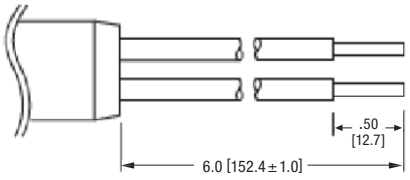

Protruding Lens

Chrome Plated Brass Housing		Black Plated Brass Housing		Color	Voltage (V DC)	Current (mA)	Intensity Typ. (mcd)	Panel Thickness
Terminals	Wire Leads	Terminals	Wire Leads					
677-1112-321F	677-1115-321F	677-1122-321F	677-1125-321F	Red	6	15	825	0.265" (6.75 mm)
677-1212-322F	677-1215-322F	677-1222-322F	677-1225-322F	Green			4135	
677-1312-323F	677-1315-323F	677-1322-323F	677-1325-323F	Orange			560	
677-1412-324F	677-1415-324F	677-1422-324F	677-1425-324F	Blue			700	
677-1112-331F	677-1115-331F	677-1122-331F	677-1125-331F	Red	12		825	
677-1212-332F	677-1215-332F	677-1222-332F	677-1225-332F	Green			4135	
677-1312-333F	677-1315-333F	677-1322-333F	677-1325-333F	Orange			560	
677-1412-334F	677-1415-334F	677-1422-334F	677-1425-334F	Blue			700	
677-1112-341F	677-1115-341F	677-1122-341F	677-1125-341F	Red	24		825	
677-1212-342F	677-1215-342F	677-1222-342F	677-1225-342F	Green			4135	
677-1312-343F	677-1315-343F	677-1322-343F	677-1325-343F	Orange			560	
677-1412-344F	677-1415-344F	677-1422-344F	677-1425-344F	Blue			700	

Recessed Lens

Chrome Plated Brass Housing		Color	Voltage (V DC)	Current (mA)	Intensity Typ. (mcd)	Panel Thickness
Terminals	Wire Leads					
677-2112-321F	677-2115-321F	Red	6	15	925	0.336" (8.50 mm)
677-2212-322F	677-2215-322F	Green			4135	
677-2312-323F	677-2315-323F	Orange			600	
677-2412-324F	677-2415-324F	Blue			730	
677-2112-331F	677-2115-331F	Red	12		925	
677-2212-332F	677-2215-332F	Green			4135	
677-2312-333F	677-2315-333F	Orange			600	
677-2412-334F	677-2415-334F	Blue			730	
677-2112-341F	677-2115-341F	Red	24		925	
677-2212-342F	677-2215-342F	Green			4135	
677-2312-343F	677-2315-343F	Orange			600	
677-2412-344F	677-2415-344F	Blue			730	

Internal Lens - Polycarbonate Housing

Part Number	Part Number	Color	Voltage (V DC)	Current (mA)	Intensity Typ. (mcd)	Panel Thickness
Terminals	Wire Leads					
677-3132-321F	677-3135-321F	Red	6	15	1370	0.187" (4.75 mm)
677-3232-322F	677-3235-322F	Green			5500	
677-3332-323F	677-3335-323F	Orange			1280	
677-3432-324F	677-3435-324F	Blue			1200	
677-3132-331F	677-3135-331F	Red	12		1370	
677-3232-332F	677-3235-332F	Green			5500	
677-3332-333F	677-3335-333F	Orange			1280	
677-3432-334F	677-3435-334F	Blue			1200	
677-3132-341F	677-3135-341F	Red	24		1370	
677-3232-342F	677-3235-342F	Green			5500	
677-3332-343F	677-3335-343F	Orange			1280	
677-3432-344F	677-3435-344F	Blue			1200	

Dialight reserves the right to make changes at any time in order to supply the best product possible. The most current version of this document will always be available at: www.dialightsignalsandcomponents.com

Warranty Statement: Except for the warranty expressly provided for [herein/above/below], Dialight disclaims any and all other warranties, express or implied, including, without limitation, any warranties of merchantability, fitness for a particular purpose, title, and noninfringement.