Description

The DIODES™ 74LVC2G34 is a dual buffer gate with standard push-pull outputs. The device is designed for operation with a power supply range of 1.65V to 5.5V. The inputs are tolerant to 5.5V allowing this device to be used in a mixed voltage environment. The device is fully specified for partial power down applications using I_{OFF}. The I_{OFF} circuitry disables the output preventing damaging current backflow when the device is powered down.

The gate performs the positive Boolean function:

$Y = A$

Features

- Wide Supply Voltage Range from 1.65V to 5.5V
- ±24mA Output Drive at 3.0V
- CMOS Low Power Consumption
- I_{OFF} Supports Partial-Power-Down Mode Operation
- Inputs Accept up to 5.5V
- ESD Protection Tested per JESD 22
- Exceeds 2000V Human Body Model (A114)
- Exceeds 1000V Charged Device Model (C101)
- Latch-up Exceeds 100mA per JESD 78, Class I
- X2-DFN1409-6 Package Designed as a Direct Replacement for Chip Scale Packaging
- Range of Package Options SOT26, SOT363, X1-DFN1010-6 (Type B), X2-DFN1010-6, X2-DFN1409-6, and X2-DFN1410-6
- Leadless Packages Named per JESD30E
- **Totally Lead-Free & Fully RoHS Compliant (Notes 1 & 2)**
- **Halogen and Antimony Free. "Green" Device (Note 3)**
- **For automotive applications requiring specific change control (i.e. parts qualified to AEC-Q100/101/104/200, PPAP capable, and manufactured in IATF 16949 certified facilities), please contact us or your local Diodes representative. https://www.diodes.com/quality/product-definitions/**

Pin Assignments

(Top View)

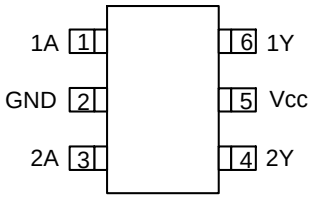

SOT26/SOT363

(Bottom View)

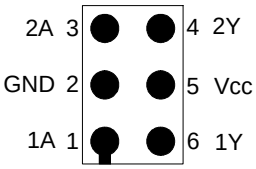

X2-DFN1409-6
Chip Scale
Alternative

(Top View)

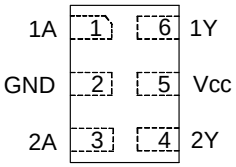

X2-DFN1410-6

(Top View)

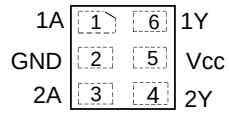

X1-DFN1010-6 (Type B)

(Top View)

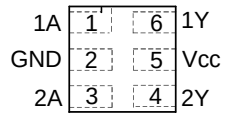

X2-DFN1010-6

Applications

- Voltage level shifting
- General purpose logics
- Power down signal isolations
- Wide array of products such as:
  - PCs, networking, notebooks, netbooks, tablets
  - Computer peripherals, hard drives, SSD, CD/DVD ROM
  - TV, DVD, DVR, set-top boxes
  - Cell phones, personal navigations/GPS
  - MP3 players, cameras, video recorders

Notes:
1. No purposely added lead. Fully EU Directive 2002/95/EC (RoHS), 2011/65/EU (RoHS 2) & 2015/863/EU (RoHS 3) compliant.
2. See https://www.diodes.com/quality/lead-free/ for more information about Diodes Incorporated's definitions of Halogen- and Antimony-free, "Green" and Lead-free.
3. Halogen- and Antimony-free "Green" products are defined as those which contain <900ppm bromine, <900ppm chlorine (<1500ppm total Br + Cl) and <1000ppm antimony compounds.

© 2022 Copyright Diodes Incorporated. All Rights Reserved.

Pin Descriptions

Pin Number	Pin Name	Function
1	1A	Data Input
2	GND	Ground
3	2A	Data Input
4	2Y	Data Output
5	V_{CC}	Supply Voltage
6	1Y	Data Output

Logic Diagram

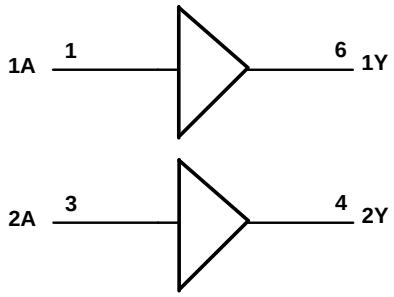

Function Table

Inputs	Output
A	**Y**
H	H
L	L

Absolute Maximum Ratings (Notes 4 & 5) (@T_A = +25°C, unless otherwise specified.)

Symbol	Parameter	Rating	Unit
ESD HBM	Human Body Model ESD Protection	2	kV
ESD CDM	Charged Device Model ESD Protection	1	kV
V_{CC}	Supply Voltage Range	-0.5 to +6.5	V
V_I	Input Voltage Range	-0.5 to +6.5	V
V_O	Voltage Applied to Output in High Impedance or I_{OFF} State	-0.5 to +6.5	V
V_O	Voltage Applied to Output in High or Low State	-0.3 to V_{CC} +0.5	V
I_{IK}	Input Clamp Current $V_I < 0$	-50	mA
I_{OK}	Output Clamp Current $V_O < 0$	-50	mA
I_O	Continuous Output Current	-50	mA
—	Continuous Current through V_{DD} or GND	±100	mA
T_J	Operating Junction Temperature	-40 to +150	°C
T_{STG}	Storage Temperature	-65 to +150	°C

Notes:
4. Stresses greater than those listed under *Absolute Maximum Ratings* can cause permanent damage to the device. These are stress ratings only, and functional operation of the device at these or any other conditions beyond those indicated under *Recommended Operating Conditions* is not implied. Exposure to *Absolute Maximum Ratings* for extended periods can affect device reliability.
5. Forcing the maximum allowed voltage could cause a condition exceeding the maximum current or conversely forcing the maximum current could cause a condition exceeding the maximum voltage. The ratings of both current and voltage must be maintained within the controlled range.

© 2022 Copyright Diodes Incorporated. All Rights Reserved.

Recommended Operating Conditions (Note 6) (@T_A = +25°C, unless otherwise specified.)

Symbol	Parameter		Min	Max	Unit
V_{CC}	Operating Voltage	Operating	1.65	5.5	V
		Data Retention Only	1.5	—	V
V_{IH}	High-Level Input Voltage	V_{CC} = 1.65V to 1.95V	0.65 x V_{CC}	—	V
		V_{CC} = 2.3V to 2.7V	1.7	—	
		V_{CC} = 3V to 3.6V	2	—	
		V_{CC} = 4.5V to 5.5V	0.7 x V_{CC}	—	
V_{IL}	Low-Level Input Voltage	V_{CC} = 1.65V to 1.95V	—	0.35 x V_{CC}	V
		V_{CC} = 2.3V to 2.7V	—	0.7	
		V_{CC} = 3V to 3.6V	—	0.8	
		V_{CC} = 4.5V to 5.5V	—	0.3 x V_{CC}	
V_I	Input Voltage		0	5.5	V
V_O	Output Voltage		0	V_{CC}	V
I_{OH}	High-Level Output Current	V_{CC} = 1.65V	—	-4	mA
		V_{CC} = 2.3V	—	-8	
		V_{CC} = 3V	—	-16	
			—	-24	
		V_{CC} = 4.5V	—	-32	
I_{OL}	Low-Level Output Current	V_{CC} = 1.65V	—	4	mA
		V_{CC} = 2.3V	—	8	
		V_{CC} = 3V	—	16	
			—	24	
		V_{CC} = 4.5V	—	32	
Δt/ΔV	Input Transition Rise or Fall Rate	V_{CC} = 1.8V ± 0.15V, 2.5V ± 0.2V	—	20	ns/V
		V_{CC} = 3.3V ± 0.3V	—	10	
		V_{CC} = 5V ± 0.5V	—	5	
T_A	Operating Free-Air Temperature	—	-40	+125	°C

Note: 6. Unused inputs should be held at V_{CC} or Ground.

Electrical Characteristics (@T_A = +25°C, unless otherwise specified.)

Symbol	Parameter	Test Conditions	Vcc	+40°C to +85°C		-40°C to +125°C		Unit
				Min	Max	Min	Max	
V_{OH}	High-Level Output Voltage	I_{OH} = -100µA	1.65V to 5.5V	V_{CC} – 0.1	—	V_{CC} – 0.1	—	V
		I_{OH} = -4mA	1.65V	1.2	—	0.95	—	
		I_{OH} = -8mA	2.3V	1.9	—	1.7	—	
		I_{OH} = -16mA	3V	2.4	—	2.2	—	
		I_{OH} = -24mA		2.3	—	2.0	—	
		I_{OH} = -32mA	4.5V	3.8	—	3.4	—	
V_{OL}	Low-Level Output Voltage	I_{OL} = 100µA	1.65V to 5.5V	—	0.1	—	0.1	V
		I_{OL} = 4mA	1.65V	—	0.45	—	0.70	
		I_{OL} = 8mA	2.3V	—	0.3	—	0.45	
		I_{OL} = 16mA	3V	—	0.4	—	0.60	
		I_{OL} = 24mA		—	0.55	—	0.80	
		I_{OL} = 32mA	4.5V	—	0.55	—	0.80	
I_I	Input Current	V_I = 5.5V or GND	0 to 5.5V	—	±5	—	±20	µA
I_{OFF}	Power Down Leakage Current	V_I or V_O = 5.5V	0	—	±10	—	±20	µA
I_{CC}	Supply Current	V_I = 5.5V or GND, I_O = 0	1.65V to 5.5V	—	10	—	40	µA
ΔI_{CC}	Additional Supply Current	Input at V_{CC} – 0.6V	3V to 5.5V	—	500	—	5000	µA

© 2022 Copyright Diodes Incorporated. All Rights Reserved.

Package Characteristics (@T_A = +25°C, V_{CC} = 3.3V, unless otherwise specified.)

Symbol	Parameter	Package	Conditions	Min	Typ	Max	Unit
C_I	Input Capacitance	Typical of All Packages	V_{CC} = 3.3V V_I = V_{CC} or GND	—	3.5	—	pF
θ_{JA}	Thermal Resistance Junction-to-Ambient	SOT26	(Note 7)	—	204	—	°C/W
		SOT363		—	371	—	
		X2-DFN1410-6		—	430	—	
		X2-DFN1409-6		—	450	—	
		X1-DFN1010-6 (Type B)		—	495	—	
		X2-DFN1010-6		—	510	—	
θ_{JC}	Thermal Resistance Junction-to-Case	SOT26	(Note 7)	—	52	—	°C/W
		SOT363		—	143	—	
		X2-DFN1410-6		—	190	—	
		X2-DFN1409-6		—	225	—	
		X1-DFN1010-6 (Type B)		—	245	—	
		X2-DFN1010-6		—	250	—	

Note: 7. Test condition for all packages: Device mounted on FR-4 substrate PC board, 2oz copper with minimum recommended pad layout.

Switching Characteristics

T_A = -40°C to +85°C, C_L = 30 or 50pF (See Figure 1)

Parameter	From (Input)	To (Output)	V_{CC} = 1.8V ±0.15V		V_{CC} = 2.5V ±0.2V		V_{CC} = 3.3V ±0.3V		V_{CC} = 5V ±0.5V		Unit
			Min	Max	Min	Max	Min	Max	Min	Max	
t_{PD}	A	Y	0.5	8.6	0.5	4.4	0.5	4.1	0.5	3.2	ns

T_A = -40°C to +125°C, C_L = 30 or 50pF (See Figure 1)

Parameter	From (Input)	To (Output)	V_{CC} = 1.8V ±0.15V		V_{CC} = 2.5V ±0.2V		V_{CC} = 3.3V ±0.3V		V_{CC} = 5V ±0.5V		Unit
			Min	Max	Min	Max	Min	Max	Min	Max	
t_{PD}	A	Y	0.5	10.8	0.5	5.5	0.5	5.1	0.5	4.0	ns

Operating Characteristics

T_A = +25°C

Parameter		Test Conditions	V_{CC} = 1.8V	V_{CC} = 2.5V	V_{CC} = 3.3V	V_{CC} = 5V	Unit
			Typ	Typ	Typ	Typ	
C_{PD}	Power Dissipation Capacitance	f = 10MHz	17	19	20	21	pF

© 2022 Copyright Diodes Incorporated. All Rights Reserved.

Parameter Measurement Information

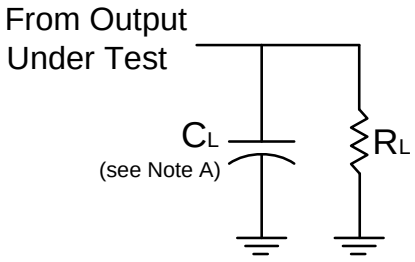

VCC	Inputs		VM	CL	RL
	VI	tr/tf			
1.8V ± 0.15V	VCC	≤ 2ns	VCC/2	30pF	1kΩ
2.5V ± 0.2V	VCC	≤ 2ns	VCC/2	30pF	500Ω
3.3V ± 0.3V	3V	≤ 2.5ns	1.5V	50pF	500Ω
5V ± 0.5V	VCC	≤ 2.5ns	VCC/2	50pF	500Ω

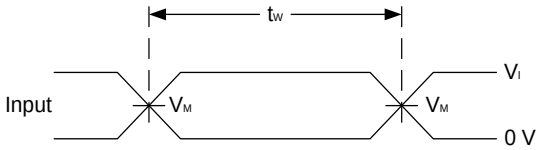

Voltage Waveform Pulse Duration

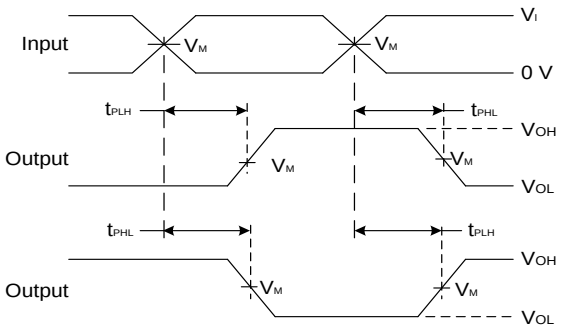

Voltage Waveform Propagation Delay Times
Inverting and Non Inverting Outputs

Figure 1. Load Circuit and Voltage Waveforms

Notes:
A. Includes test lead and test apparatus capacitance.
B. All pulses are supplied at pulse repetition rate ≤ 10MHz.
C. Inputs are measured separately one transition per measurement.
D. t_{PLH} and t_{PHL} are the same as t_{PD}.

© 2022 Copyright Diodes Incorporated. All Rights Reserved.

Ordering Information

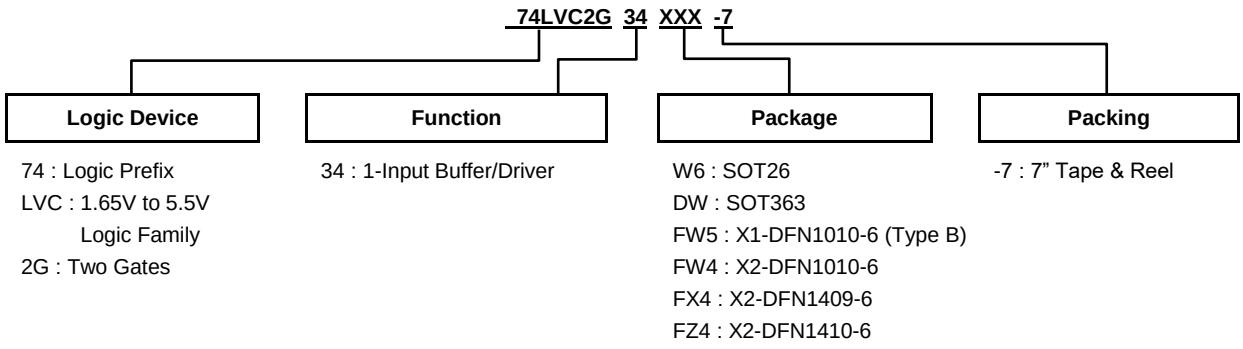

Part Number	Part Number Suffix	Package Code	Package (Note 8)	Package Size	Packing (Note 9)	
					Qty.	Carrier
74LVC2G34W6-7	-7	W6	SOT26	2.8mm x 2.2mm x 1.1mm 0.95mm Lead Pitch	3000	Tape & Reel
74LVC2G34DW-7	-7	DW	SOT363	2.0mm x 2.0mm x 1.1mm 0.65mm Lead Pitch	3000	Tape & Reel
74LVC2G34FW5-7	-7	FW5	X1-DFN1010-6 (Type B)	1.0mm x 1.0mm x 0.5mm 0.35mm Pad Pitch	5000	Tape & Reel
74LVC2G34FW4-7	-7	FW4	X2-DFN1010-6	1.0mm x 1.0mm x 0.4mm 0.35mm Pad Pitch	5000	Tape & Reel
74LVC2G34FX4-7	-7	FX4	X2-DFN1409-6 Chip Scale Alternative	1.4mm x 0.9mm x 0.4mm 0.5mm Pad Pitch	5000	Tape & Reel
74LVC2G34FZ4-7	-7	FZ4	X2-DFN1410-6	1.4mm x 1.0mm x 0.4mm 0.5mm Pad Pitch	5000	Tape & Reel

Notes: 8. Pad layout as shown on Diodes Incorporated's suggested pad layout, which can be found on our website at http://www.diodes.com/package-outlines.html.
9. The taping orientation is located on our website https://www.diodes.com/assets/Packaging-Support-Docs/ap02007.pdf.

Marking Information

(1) SOT26, SOT363

(Top View)

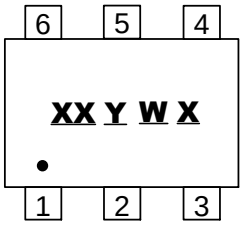

XX: Identification Code
Y: Year 0 to 9 (ex: 2 = 2022)
W: Week: A to Z: Week 1 to 26;
a to z: Week 27 to 52; z Represents Week 52 and 53
X: A to Z: Internal Code

Part Number	Package	Identification Code
74LVC2G34W6-7	SOT26	Z7
74LVC2G34DW-7	SOT363	Z7

© 2022 Copyright Diodes Incorporated. All Rights Reserved.

Marking Information (continued)

(2) X1-DFN1010-6 (Type B), X2-DFN1010-6, X2-DFN1409-6, X2-DFN1410-6

(Top View)

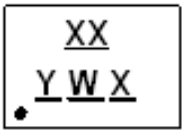

XX: Identification Code
Y: Year 0 to 9 (ex: 2 = 2022)
W: Week: A to Z: Week 1 to 26;
a to z: Week 27 to 52; z Represents Week 52 and 53
X: A to Z: Internal Code

Part Number	Package	Identification Code
74LVC2G34FW4-7	X2-DFN1010-6	Z7
74LVC2G34FW5-7	X1-DFN1010-6 (Type B)	W7
74LVC2G34FX4-7	X2-DFN1409-6	X7
74LVC2G34FZ4-7	X2-DFN1410-6	Z7

© 2022 Copyright Diodes Incorporated. All Rights Reserved.

Package Outline Dimensions

Please see http://www.diodes.com/package-outlines.html for the latest version.

SOT26

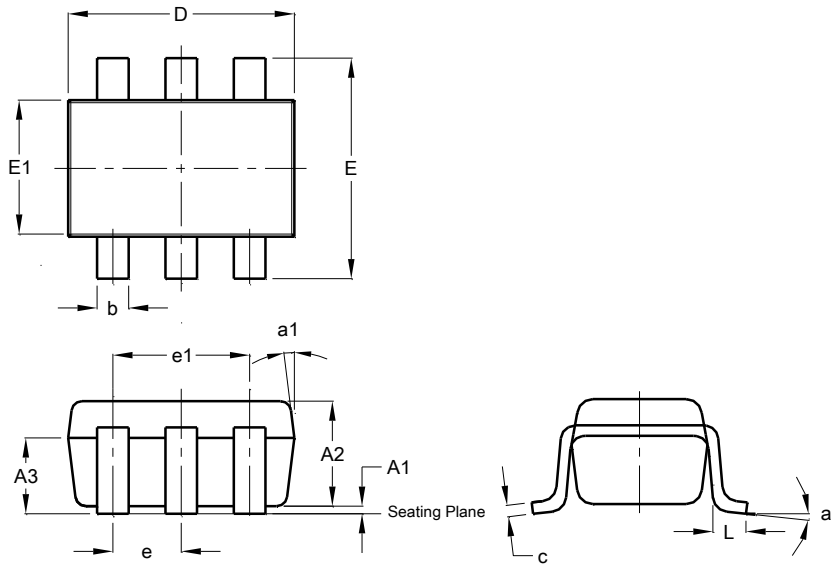

SOT26			
Dim	**Min**	**Max**	**Typ**
A1	0.013	0.10	0.05
A2	1.00	1.30	1.10
A3	0.70	0.80	0.75
b	0.35	0.50	0.38
c	0.10	0.20	0.15
D	2.90	3.10	3.00
e	-	-	0.95
e1	-	-	1.90
E	2.70	3.00	2.80
E1	1.50	1.70	1.60
L	0.35	0.55	0.40
a	-	-	8°
a1	-	-	7°
All Dimensions in mm			

SOT363

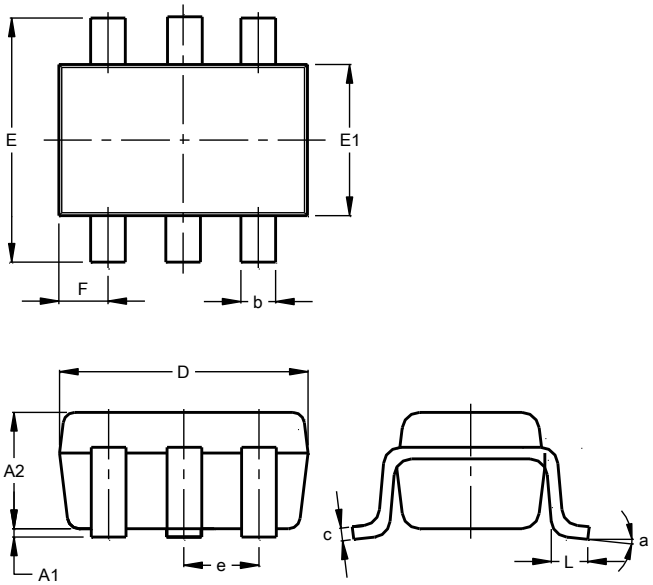

SOT363			
Dim	**Min**	**Max**	**Typ**
A1	0.00	0.10	0.05
A2	0.90	1.00	0.95
b	0.10	0.30	0.25
c	0.10	0.22	0.11
D	1.80	2.20	2.15
E	2.00	2.20	2.10
E1	1.15	1.35	1.30
e	0.650 BSC		
F	0.40	0.45	0.425
L	0.25	0.40	0.30
a	0°	8°	--
All Dimensions in mm			

© 2022 Copyright Diodes Incorporated. All Rights Reserved.

Package Outline Dimensions (continued)

Please see http://www.diodes.com/package-outlines.html for the latest version.

X1-DFN1010-6 (Type B)

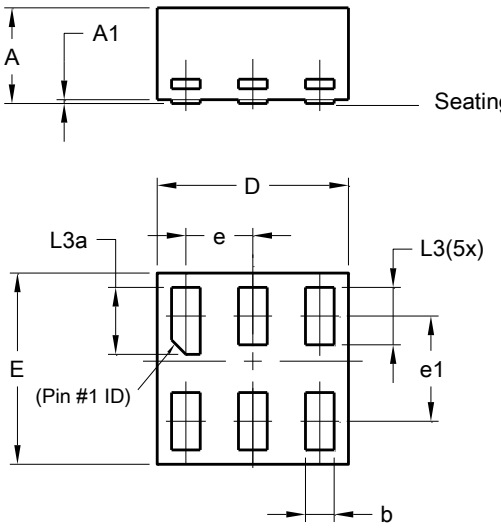

X1-DFN1010-6 (Type B)			
Dim	**Min**	**Max**	**Typ**
A	-	0.50	0.39
A1	-	0.04	-
b	0.12	0.20	0.15
D	0.95	1.050	1.00
E	0.95	1.050	1.00
e	0.35 BSC		
e1	0.55 BSC		
L3	0.27	0.30	0.30
L3a	0.32	0.40	0.35
All Dimensions in mm			

X2-DFN1010-6

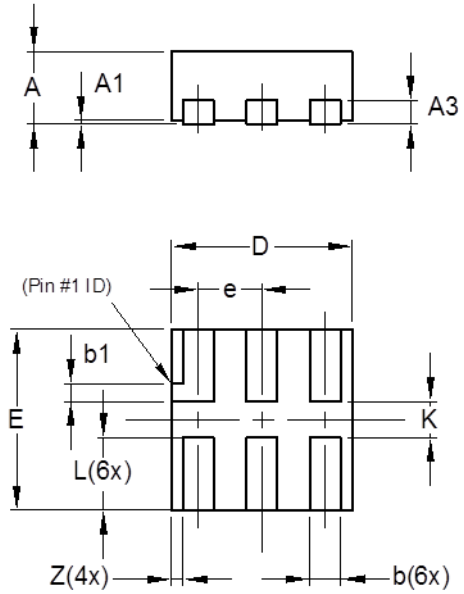

X2-DFN1010-6			
Dim	**Min**	**Max**	**Typ**
A	—	0.40	0.39
A1	0.00	0.05	0.02
A3	—	—	0.13
b	0.14	0.20	0.17
b1	0.05	0.15	0.10
D	0.95	1.05	1.00
E	0.95	1.05	1.00
e	—	—	0.35
L	0.35	0.45	0.40
K	0.15	—	—
Z	—	—	0.065
All Dimensions in mm			

© 2022 Copyright Diodes Incorporated. All Rights Reserved.

Package Outline Dimensions (continued)

Please see http://www.diodes.com/package-outlines.html for the latest version.

X2-DFN1409-6

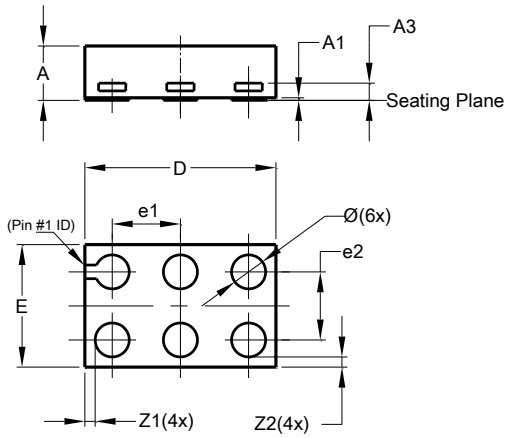

X2-DFN1409-6			
Dim	**Min**	**Max**	**Typ**
A	-	0.40	0.39
A1	0	0.05	0.02
A3	-	-	0.13
Ø	0.20	0.30	0.25
D	1.35	1.45	1.40
E	0.85	0.95	0.90
e1	-	-	0.50
e2	-	-	0.50
Z1	-	-	0.075
Z2	-	-	0.075
All Dimensions in mm			

X2-DFN1410-6

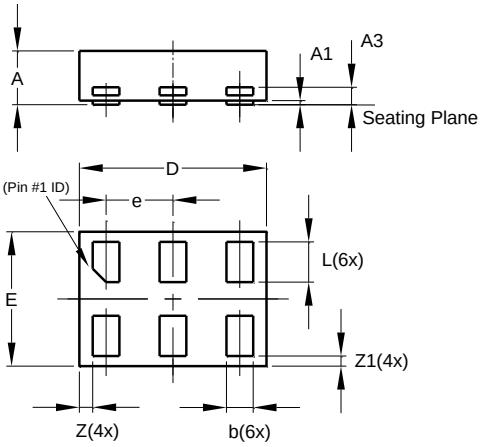

X2-DFN1410-6			
Dim	**Min**	**Max**	**Typ**
A	—	0.40	0.39
A1	0.00	0.05	0.02
A3	—	—	0.13
b	0.15	0.25	0.20
D	1.35	1.45	1.40
E	0.95	1.05	1.00
e	—	—	0.50
L	0.25	0.35	0.30
Z	—	—	0.10
Z1	0.045	0.105	0.075
All Dimensions in mm			

© 2022 Copyright Diodes Incorporated. All Rights Reserved.

Suggested Pad Layout

Please see http://www.diodes.com/package-outlines.html for the latest version.

SOT26

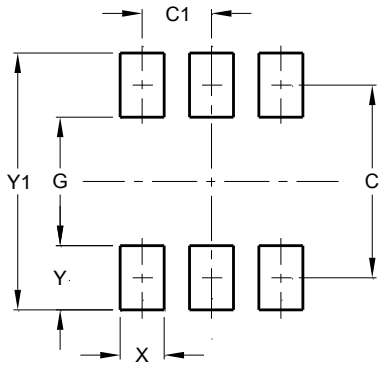

Dimensions	Value (in mm)
C	2.40
C1	0.95
G	1.60
X	0.55
Y	0.80
Y1	3.20

SOT363

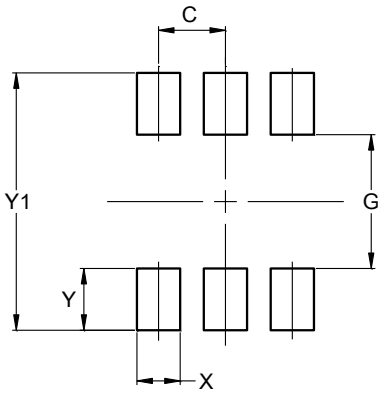

Dimensions	Value (in mm)
C	0.650
G	1.300
X	0.420
Y	0.600
Y1	2.500

X1-DFN1010-6 (Type B)

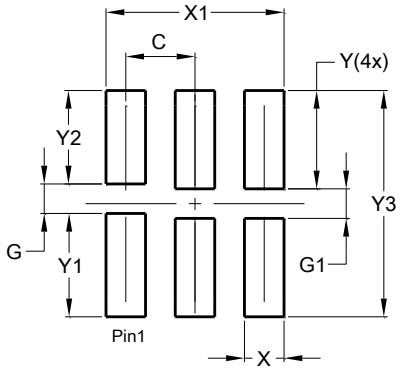

Dimensions	Value (in mm)
C	0.350
G	0.150
G1	0.150
X	0.200
X1	0.900
Y	0.500
Y1	0.525
Y2	0.475
Y3	1.150

© 2022 Copyright Diodes Incorporated. All Rights Reserved.

Suggested Pad Layout (continued)

Please see http://www.diodes.com/package-outlines.html for the latest version.

X2-DFN1010-6

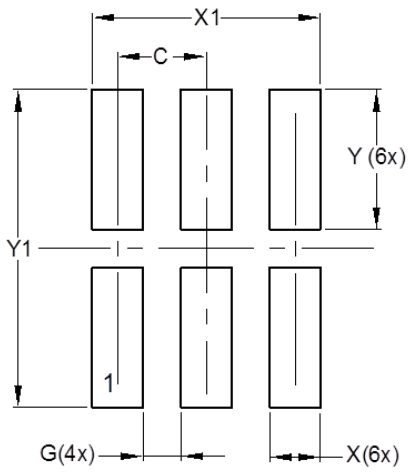

Dimensions	Value (in mm)
C	0.350
G	0.150
X	0.200
X1	0.900
Y	0.550
Y1	1.250

X2-DFN1409-6

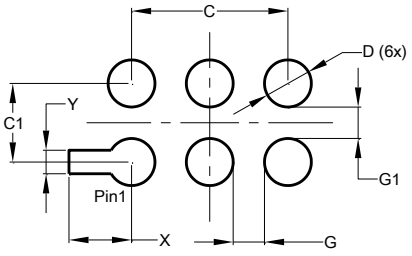

Dimensions	Value (in mm)
C	1.000
C1	0.500
D	0.300
G	0.200
G1	0.200
X	0.400
Y	0.150

X2-DFN1410-6

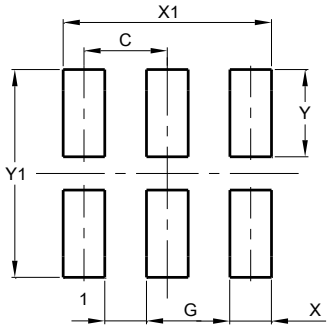

Dimensions	Value (in mm)
C	0.500
G	0.250
X	0.250
X1	1.250
Y	0.525
Y1	1.250

© 2022 Copyright Diodes Incorporated. All Rights Reserved.

Mechanical Data

SOT26

- Moisture Sensitivity: Level 1 per J-STD-020
- Terminals: Finish - Matte Tin Plated Leads, Solderable per MIL-STD-202, Method 208 e3
- Weight: 0.016 grams (Approximate)

SOT363

- Moisture Sensitivity: Level 1 per J-STD-020
- Terminals: Finish - Matte Tin Plated Leads, Solderable per MIL-STD-202, Method 208 e3
- Weight: 0.006 grams (Approximate)

X1-DFN1010-6 (Type B)

- Moisture Sensitivity: Level 1 per J-STD-020
- Terminals: Finish - NiPdAu Nickel Palladium Gold, Solderable per MIL-STD-202, Method 208 e4
- Weight: 0.001 grams (Approximate)

X2-DFN1010-6

- Moisture Sensitivity: Level 1 per J-STD-020
- Terminals: Finish - NiPdAu Nickel Palladium Gold, Solderable per MIL-STD-202, Method 208 e4
- Weight: 0.001 grams (Approximate)

X2-DFN1409-6

- Moisture Sensitivity: Level 1 per J-STD-020
- Terminals: Finish - NiPdAu Nickel Palladium Gold, Solderable per MIL-STD-202, Method 208 e4
- Weight: 0.002 grams (Approximate)

X2-DFN1410-6

- Moisture Sensitivity: Level 1 per J-STD-020
- Terminals: Finish - NiPdAu Nickel Palladium Gold, Solderable per MIL-STD-202, Method 208 e4
- Weight: 0.002 grams (Approximate)

© 2022 Copyright Diodes Incorporated. All Rights Reserved.

IMPORTANT NOTICE

1. DIODES INCORPORATED (Diodes) AND ITS SUBSIDIARIES MAKE NO WARRANTY OF ANY KIND, EXPRESS OR IMPLIED, WITH REGARDS TO ANY INFORMATION CONTAINED IN THIS DOCUMENT, INCLUDING, BUT NOT LIMITED TO, THE IMPLIED WARRANTIES OF MERCHANTABILITY, FITNESS FOR A PARTICULAR PURPOSE OR NON-INFRINGEMENT OF THIRD PARTY INTELLECTUAL PROPERTY RIGHTS (AND THEIR EQUIVALENTS UNDER THE LAWS OF ANY JURISDICTION).

2. The Information contained herein is for informational purpose only and is provided only to illustrate the operation of Diodes' products described herein and application examples. Diodes does not assume any liability arising out of the application or use of this document or any product described herein. This document is intended for skilled and technically trained engineering customers and users who design with Diodes' products. Diodes' products may be used to facilitate safety-related applications; however, in all instances customers and users are responsible for (a) selecting the appropriate Diodes products for their applications, (b) evaluating the suitability of Diodes' products for their intended applications, (c) ensuring their applications, which incorporate Diodes' products, comply the applicable legal and regulatory requirements as well as safety and functional-safety related standards, and (d) ensuring they design with appropriate safeguards (including testing, validation, quality control techniques, redundancy, malfunction prevention, and appropriate treatment for aging degradation) to minimize the risks associated with their applications.

3. Diodes assumes no liability for any application-related information, support, assistance or feedback that may be provided by Diodes from time to time. Any customer or user of this document or products described herein will assume all risks and liabilities associated with such use, and will hold Diodes and all companies whose products are represented herein or on Diodes' websites, harmless against all damages and liabilities.

4. Products described herein may be covered by one or more United States, international or foreign patents and pending patent applications. Product names and markings noted herein may also be covered by one or more United States, international or foreign trademarks and trademark applications. Diodes does not convey any license under any of its intellectual property rights or the rights of any third parties (including third parties whose products and services may be described in this document or on Diodes' website) under this document.

5. Diodes' products are provided subject to Diodes' Standard Terms and Conditions of Sale (https://www.diodes.com/about/company/terms-and-conditions/terms-and-conditions-of-sales/) or other applicable terms. This document does not alter or expand the applicable warranties provided by Diodes. Diodes does not warrant or accept any liability whatsoever in respect of any products purchased through unauthorized sales channel.

6. Diodes' products and technology may not be used for or incorporated into any products or systems whose manufacture, use or sale is prohibited under any applicable laws and regulations. Should customers or users use Diodes' products in contravention of any applicable laws or regulations, or for any unintended or unauthorized application, customers and users will (a) be solely responsible for any damages, losses or penalties arising in connection therewith or as a result thereof, and (b) indemnify and hold Diodes and its representatives and agents harmless against any and all claims, damages, expenses, and attorney fees arising out of, directly or indirectly, any claim relating to any noncompliance with the applicable laws and regulations, as well as any unintended or unauthorized application.

7. While efforts have been made to ensure the information contained in this document is accurate, complete and current, it may contain technical inaccuracies, omissions and typographical errors. Diodes does not warrant that information contained in this document is error-free and Diodes is under no obligation to update or otherwise correct this information. Notwithstanding the foregoing, Diodes reserves the right to make modifications, enhancements, improvements, corrections or other changes without further notice to this document and any product described herein. This document is written in English but may be translated into multiple languages for reference. Only the English version of this document is the final and determinative format released by Diodes.

8. Any unauthorized copying, modification, distribution, transmission, display or other use of this document (or any portion hereof) is prohibited. Diodes assumes no responsibility for any losses incurred by the customers or users or any third parties arising from any such unauthorized use.

9. This Notice may be periodically updated with the most recent version available at https://www.diodes.com/about/company/terms-and-conditions/important-notice

DIODES is a trademark of Diodes Incorporated in the United States and other countries.
The Diodes logo is a registered trademark of Diodes Incorporated in the United States and other countries.
© 2022 Diodes Incorporated. All Rights Reserved.

www.diodes.com

© 2022 Copyright Diodes Incorporated. All Rights Reserved.