# 3.3 V OCTAL BUS TRANSCEIVER WITH 3 STATE OUTPUTS

NEW PRODUCT

## Description

The 74LVT245BB is an octal transceiver designed for asynchronous communication between data buses. The device transmits data from the A bus to the B bus or from the B bus to the A bus, depending on the logic level at the direction-control (DIR) input. The output-enable ($\overline{OE}$) Pin can be used to disable the device so the buses effectively are isolated.

The device is designed for operation with a power supply range of 2.7V to 3.6V.

The inputs are tolerant to 5.5V allowing this device to be used in a mixed voltage environment. The device is fully specified for partial power down applications using $I_{OFF}$. The $I_{OFF}$ circuitry disables the output preventing damaging current backflow when the device is powered down.

## Pin Assignments

(Top View)

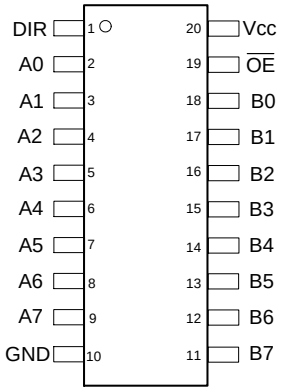


TSSOP-20

(Top Transparent View)

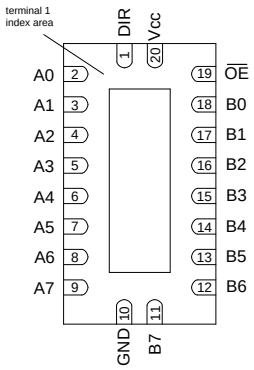


QFN-20

## Features

- Supply Voltage Range from 2.7V to 3.6V
- Outputs Sink 64mA or Source 32mA
- CMOS Low Power Consumption
- $I_{OFF}$ Supports Partial Power-Down Operation
- Inputs or Outputs Accept Up to 5.5V
- Inputs Include Bus-Hold – No Resistors on Unused Inputs.
- Inputs can be Driven by 3.3V or 5V Allowing for Mixed Voltage Applications
- Schmitt Trigger Action at All Inputs
- Outputs in 3-State During Power Up – Allows for Hot Insertion
- Outputs Have Less than 125µA Leakage when Forced to 5.5V
- ESD Protection Tested per JESD 22
  - Exceeds 200-V Machine Model (A115)
  - Exceeds 2000-V Human Body Model (A114)
  - Exceeds 1000-V Charged Device Model (C101)
- Latch-Up Exceeds 500mA per JESD 78, Class II
- **Totally Lead-Free & Fully RoHS Compliant (Notes 1 & 2)**
- **Halogen and Antimony Free. "Green" Device (Note 3)**

## Applications

- General Purpose Logic
- Bus Driving
- Power Down Signal Isolation
- Wide Array of Products such as:
  - Servers, PCs, Notebooks, Netbooks, Ultrabooks
  - Networking Computer Peripherals, Hard Drives, CD/DVD ROM
  - TVs, DVDs, DVRs, Set Top Boxes

Notes:
1. No purposely added lead. Fully EU Directive 2002/95/EC (RoHS) & 2011/65/EU (RoHS 2) compliant.
2. See http://www.diodes.com/quality/lead_free.html for more information about Diodes Incorporated's definitions of Halogen and Antimony free, "Green" and Lead-Free.
3. Halogen and Antimony free "Green" products are defined as those which contain <900ppm bromine, <900ppm chlorine (<1500ppm total Br + Cl) and <1000ppm antimony compounds.


© Diodes Incorporated

NEW PRODUCT

## Ordering Information

74 LVT 245BB xxx -13

| Logic Device | Function | Package | Packing |
|---|---|---|---|
| 74: Logic Prefix | 245BB: Octal Bus Transceiver with 3-state Outputs | T20: TSSOP-20<br>Q20: QFN-20 | **-13: 13" Tape & Reel** |

| Part Number | Package Code | Package (Note 4 & 5) | Package Size | 13" Tape and Reel | |
|---|---|---|---|---|---|
| | | | | Quantity | Part Number Suffix |
| 74LVT245BBT20-13 | T20 | TSSOP-20 | 6.4mm x 6.5mm x 1.2mm 0.65mm lead pitch | 2,500/Tape & Reel | -13 |
| 74LVT245BBQ20-13 | Q20 | V-QFN4525-20 | 2.5mm x 4.5mm x 0.95mm 0.50mm lead pitch | 2,500/Tape & Reel | -13 |

Notes: 4. Pad layout as shown on Diodes Incorporated's package outline PDFs, which can be found on our website at http://www.diodes.com/package-outlines.html.
5. V-QFN4525-20 is a JEDEC recognized naming convention that specifies the package thickness category as V and the number 4525 describes the package as 4.5mm × 2.5mm.

## Pin Descriptions

| Pin Number | Pin Name | Description |
|---|---|---|
| 1 | DIR | Direction |
| 2 | A0 | Data I/O |
| 3 | A1 | Data I/O |
| 4 | A2 | Data I/O |
| 5 | A3 | Data I/O |
| 6 | A4 | Data I/O |
| 7 | A5 | Data I/O |
| 8 | A6 | Data I/O |
| 9 | A7 | Data I/O |
| 10 | GND | Ground |
| 11 | B7 | Data I/O |
| 12 | B6 | Data I/O |
| 13 | B5 | Data I/O |
| 14 | B4 | Data I/O |
| 15 | B3 | Data I/O |
| 16 | B2 | Data I/O |
| 17 | B1 | Data I/O |
| 18 | B0 | Data I/O |
| 19 | $\overline{OE}$ | Output Enable |
| 20 | $V_{CC}$ | Supply Voltage |

## Logic Diagram

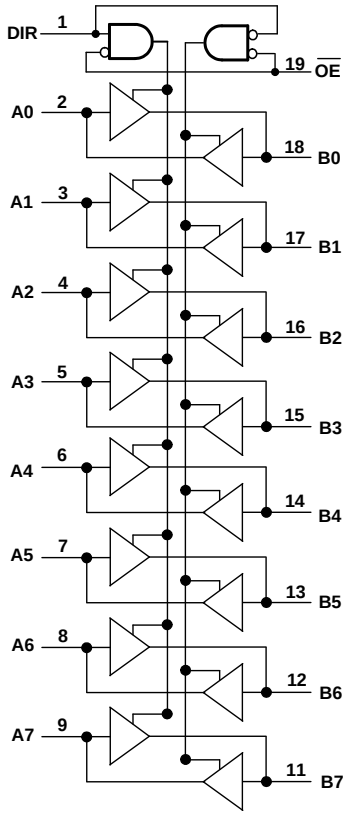


## Function Table

| INPUTS | | Operation |
|---|---|---|
| $\overline{OE}$ | DIR | |
| L | L | B Data to A Bus |
| L | H | A Data to B Bus |
| H | X | Bus Isolation |


© Diodes Incorporated

NEW PRODUCT

## Absolute Maximum Ratings (Notes 6 & 7)

| Symbol | Description | Rating | Unit |
|---|---|---|---|
| ESD HBM | Human Body Model ESD Protection | 2 | kV |
| ESD CDM | Charged Device Model ESD Protection | 1 | kV |
| ESD MM | Machine Model ESD Protection | 200 | V |
| $V_{CC}$ | Supply Voltage Range | -0.5 to +4.6 | V |
| $V_I$ | Input Voltage Range (Note 7) | -0.5 to +7.0 | V |
| $V_O$ | Output Voltage Range Output in OFF of HIGH State (Note 7) | -0.5 to +7.0 | V |
| $I_{IK}$ | Input Clamp Current $V_I$< 0V | -50 | mA |
| $I_{OK}$ | Output Clamp Current $V_O$< 0V | -50 | mA |
| $I_{OL}$ | Output Current – LOW State | 128 | mA |
| $I_{OH}$ | Output Current – HIGH State | -64 | mA |
| $T_J$ | Operating Junction Temperature | -40 to +150 | °C |
| $T_{STG}$ | Storage Temperature | -65 to +150 | °C |
| $P_{TOT}$ | Total Power Dissipation | 500 | mW |

Notes: 6. Stresses beyond the absolute maximum may result in immediate failure or reduced reliability. These are stress values and device operation should be within recommend values.
7. Forcing the maximum allowed voltage could cause a condition exceeding the maximum current or conversely forcing the maximum current could cause a condition exceeding the maximum voltage. The ratings of both current and voltage must be maintained within the controlled range.

## Recommended Operating Conditions (Note 8)

| Symbol | Parameter | Conditions | Min | Max | Unit |
|---|---|---|---|---|---|
| $V_{CC}$ | Supply Voltage | — | 2.7 | 3.6 | V |
| $V_I$ | Input Voltage | — | 0 | 5.5 | V |
| $V_O$ | Output Voltage | — | 0 | 5.5 | V |
| $I_{OH}$ | High-Level Output Current | $V_{CC}$ = 3.0V | — | -32 | mA |
| $I_{OL}$ | Low-Level Output Current | $V_{CC}$ = 3.0V | — | 32 | mA |
| | | $V_{CC}$ = 3.0V (Note 9) | — | 64 | |
| Δt/ΔV | Input Transition Rise or Fall Rate | — | — | 10 | ns/V |
| $T_A$ | Operating Free-Air Temperature | — | -40 | +125 | °C |

Notes: 8. Unused inputs should be held at $V_{CC}$ or ground.
9. For Iol > 32mA the current duty cycle ≤ 50%, Frequency > 1Khz.


© Diodes Incorporated

NEW PRODUCT

## Electrical Characteristics

| Symbol | Parameter | Test Conditions | $V_{CC}$ | $T_A$ = -40°C to +85°C | | | Unit |
|---|---|---|---|---|---|---|---|
| | | | | Min | Typical | Max | |
| $V_{IK}$ | Input Clamping Voltage | $I_{IK}$ = -18mA | 2.7V | -1.2 | -0.9 | — | — |
| $V_{IH}$ | High-Level Input Voltage | — | 2.7V to 3.6V | 2.0 | — | — | V |
| $V_{IL}$ | Low-Level input Voltage | — | 2.7V to 3.6V | — | — | 0.8 | V |
| $V_{OH}$ | High-Level Output Voltage | $I_{OH}$ = -100µA | 2.7V to 3.6V | $V_{CC}$ -0.2 | $V_{CC}$ -0.1 | — | |
| | | $I_{OH}$ = -8mA | 2.7V | 2.4 | 2.5 | — | V |
| | | $I_{OH}$ = -34mA | 3.0V | 2.0 | 2.2 | — | |
| $V_{OL}$ | Low-Level Output Voltage | $I_{OL}$ = 100µA | 2.7V to 3.6V | — | 0.1 | 0.2 | V |
| | | $I_{OL}$ = 24mA | 2.7V | — | 0.3 | 0.5 | |
| | | $I_{OL}$ = 16mA | 3.0V | — | 0.25 | 0.4 | |
| | | $I_{OL}$ = 24mA | 3.0V | — | 0.3 | 0.5 | |
| | | $I_{OL}$ = 64mA | 3.0V | — | 0.4 | 0.55 | |
| $I_{OFF}$ | Power Down Leakage Current | $V_I$ or $V_O$ = 0 to 4.5V | 0V | — | ±1 | ±100 | µA |
| $I_{O\text{-}Leakage}$ | Output Leakage Current | $V_O$ = 5.5V; Output HIGH | 3.6V | | 60 | 125 | µA |
| $I_{OZPU}$ | Power-Up I/O Leakage | $V_O$ = 0.5V to 3.0V<br>$\overline{OE}$ = Don't Care | 0V to 1.2V | — | 15 | ±100 | µA |
| $I_{OZPD}$ | Power-Down I/O Leakage | $V_O$ = 0.5V to 3.0V<br>$\overline{OE}$ = Don't Care | 0V to 1.2 V | — | 15 | ±100 | µA |
| $I_I$ | Input Current Control Pins | $V_I$ = 5.5V | 0V or 3.6V | — | 1 | 10 | µA |
| | | $V_I$ = $V_{CC}$ or GND | 3.6V | — | ±0.1 | ±1 | |
| | Input Current I/O Data Pins | $V_I$ = 5.5V | 3.6V | — | 1 | 20 | µA |
| | | $V_I$ = $V_{CC}$ | 3.6V | — | .1 | 1 | |
| | | $V_I$ = GND | 3.6V | -5 | -1 | | |
| $I_{BHL}$ | Bus Hold LOW Current | $V_I$ = 0.8V | 3.0V | 75 | 150 | — | µA |
| $I_{BHH}$ | Bus Hold HIGH Current | $V_I$ = 2.0V | 3.0V | -150 | -75 | — | µA |
| $I_{BHLO}$ | Bus Hold LOW Overdrive Current | $V_I$ = 3.6V | 0V to 3.0V | 500 | — | — | µA |
| $I_{BHHO}$ | Bus Hold HIGH Overdrive Current | $V_I$ = 3.6V | 0V to 3.0V | — | — | -500 | µA |
| $I_{CC}$ | Supply Current | $V_I$ = GND or $V_{CC}$, $I_O$ = 0 | 3.6 V | — | — | — | mA |
| | | Outputs HIGH | | — | 0.13 | 0.19 | |
| | | Output LOW | | — | 3 | 12 | |
| | | Outputs Disabled | | — | 0.13 | 0.19 | |
| $\Delta I_{CC}$ | Additional Supply Current | One Input at $V_{CC}$-0.6V<br>Others at $V_{CC}$ or Ground<br>Io = 0A | 3.0V to 3.6V | — | 100 | 200 | µA |
| $C_I$ | Input Capacitance | Control Pins; $V_I$ = GND or $V_{CC}$ | 0V to 3.6V | — | 4 | — | pF |
| | | I/O Pins; $V_I$ = GND or $V_{CC}$ | | — | 10 | — | |


© Diodes Incorporated

NEW PRODUCT

## Switching Characteristics (Figure 1)

| Symbol | Parameter | $V_{CC}$ | $T_A$ = -40°C to +85°C | | | Unit |
|---|---|---|---|---|---|---|
| | | | Min | Typ | Max | |
| $t_{PLH}$ | LOW to HIGH Propagation Delay $A_N$ to $B_N$ or $B_N$ to $A_N$ | 2.7V | — | — | 5.5 | ns |
| | | 3.3V ± 0.3 | 1.2 | 2.4 | 4.8 | |
| $t_{PHL}$ | HIGH to LOW Propagation Delay $A_N$ to $B_N$ or $B_N$ to $A_N$ | 2.7V | — | — | 4.7 | |
| | | 3.3V ± 0.3 | 1.2 | 2.4 | 4.4 | |
| $t_{PZH}$ | Z-State to HIGH Enable Time $\overline{OE}$ to $A_N$ or $\overline{OE}$ to $B_N$ | 2.7V | — | — | 8.9 | ns |
| | | 3.3V ± 0.3 | 1.3 | 3.3 | 7.7 | |
| $t_{PZL}$ | Z-State to LOW Enable Time $\overline{OE}$ to $A_N$ or $\overline{OE}$ to $B_N$ | 2.7V | — | — | 6.9 | |
| | | 3.3V ± 0.3 | 1.7 | 3.2 | 6.4 | |
| $t_{PHZ}$ | HIGH to Z-State Disable Time $\overline{OE}$ to $A_N$ or $\overline{OE}$ to $B_N$ | 2.7V | — | — | 6.5 | ns |
| | | 3.3V ± 0.3 | 2.2 | 3.6 | 6.0 | |
| $t_{PLZ}$ | LOW to Z-State Disable Time $\overline{OE}$ to $A_N$ or $\overline{OE}$ to $B_N$ | 2.7V | — | — | 5.5 | |
| | | 3.3V ± 0.3 | 2.2 | 3.4 | 5.5 | |

## Package Characteristics

| Symbol | Parameter | Package | Test Conditions | Min | Typ. | Max | Unit |
|---|---|---|---|---|---|---|---|
| $\theta_{JA}$ | Thermal Resistance Junction-to-Ambient | TSSOP-20 | (Note 10) | — | 74 | — | °C/W |
| $\theta_{JC}$ | Thermal Resistance Junction-to-Case | TSSOP-20 | (Note 10) | — | 15 | — | °C/W |
| $\theta_{JA}$ | Thermal Resistance Junction-to-Ambient | V-QFN4525-20 | (Note 10) | — | 67 | — | °C/W |
| $\theta_{JC}$ | Thermal Resistance Junction-to-Case | V-QFN4525-20 | (Note 10) | — | 20 | — | °C/W |

Note: 10. Test conditions for TSSOP-20 and V-QFN4525-20: Devices mounted on 4 layer FR-4 substrate PC board, 2oz copper, with minimum recommended pad layout per JESD 51-7.


© Diodes Incorporated

NEW PRODUCT

## Parameter Measurement Information

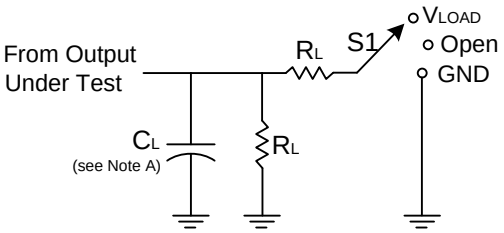


| TEST | S1 |
|---|---|
| $t_{PLH}/t_{PHL}$ | Open |
| $t_{PLZ}/t_{PZL}$ | $V_{LOAD}$ |
| $t_{PHZ}/t_{PZH}$ | GND |

| $V_{CC}$ | Inputs | | $V_M$ | $V_{LOAD}$ | $C_L$ | $R_L$ | $V\Delta$ |
|---|---|---|---|---|---|---|---|
| | $V_I$ | $t_R/t_F$ | | | | | |
| 3.3V±0.3V | 2.7V | ≤2.5ns | 1.5V | 6V | 50pF | 500Ω | 0.3V |

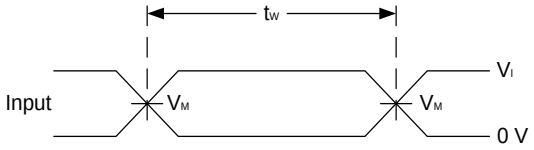


**Voltage Waveform Pulse Duration**

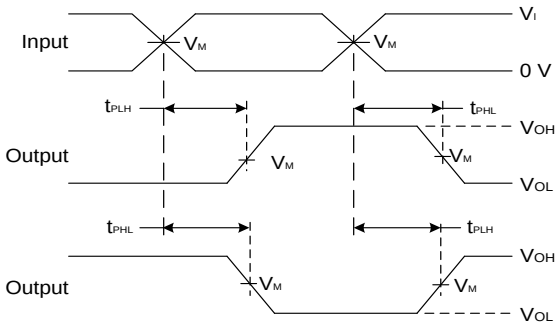


**Voltage Waveform Propagation Delay Times**
**Inverting and Non Inverting Outputs**

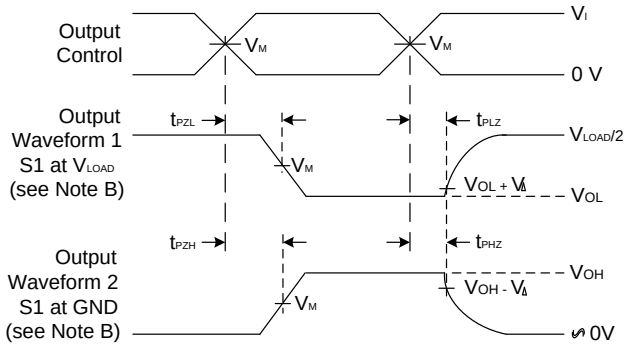


**Voltage Waveform Enable and Disable Times**
**Low and High Level Enabling**

Notes: A. Includes test lead and test apparatus capacitance.
B. All pulses are supplied at pulse repetition rate ≤ 10 MHz.
C. Inputs are measured separately one transition per measurement.

**Figure 1 Load Circuit and Voltage Waveforms**


© Diodes Incorporated

NEW PRODUCT

## Marking Information

**1) TSSOP20**

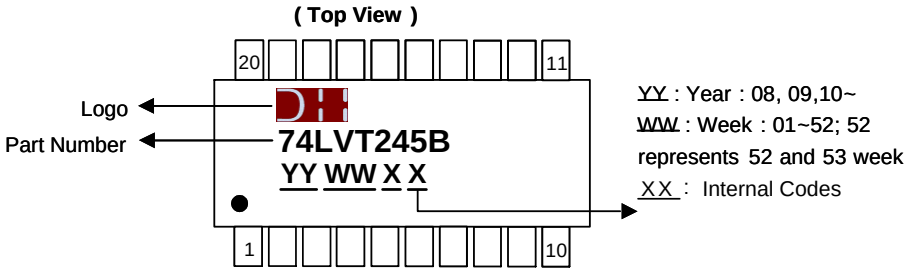


| Part Number | Package |
|---|---|
| 74LVT245BBT20-13 | TSSOP-20 |

**2) QFN-20 (V-QFN4525-20)**

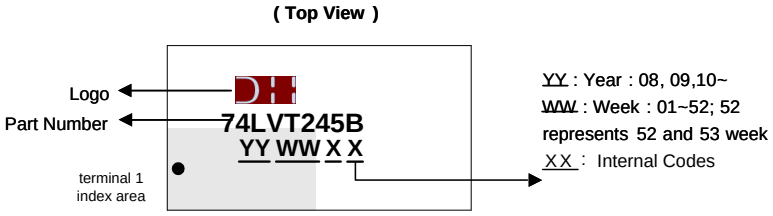


| Part Number | Package |
|---|---|
| 74LVT245BBQ20-13 | V-QFN4525-20 |


© Diodes Incorporated

NEW PRODUCT

## Package Outline Dimensions

Please see http://www.diodes.com/package-outlines.html for the latest version.

**TSSOP-20**

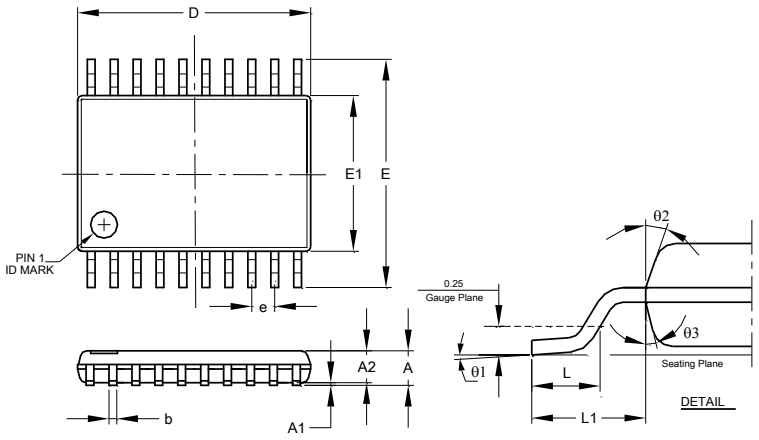


| TSSOP-20 | | | |
|---|---|---|---|
| **Dim** | **Min** | **Max** | **Typ** |
| **A** | — | 1.20 | — |
| **A1** | 0.05 | 0.15 | — |
| **A2** | 0.80 | 1.05 | — |
| **b** | 0.19 | 0.30 | — |
| **c** | 0.09 | 0.20 | — |
| **D** | 6.40 | 6.60 | 6.50 |
| **E** | 6.20 | 6.60 | 6.40 |
| **E1** | 4.30 | 4.50 | 4.40 |
| **e** | 0.65 BSC | | |
| **L** | 0.45 | 0.75 | 0.60 |
| **L1** | 1.0 REF | | |
| **θ1** | 0° | 8° | — |
| **θ2** | 10° | 14° | 12° |
| **θ3** | 10° | 14° | 12° |
| **All Dimensions in mm** | | | |

**V-QFN4525-20**

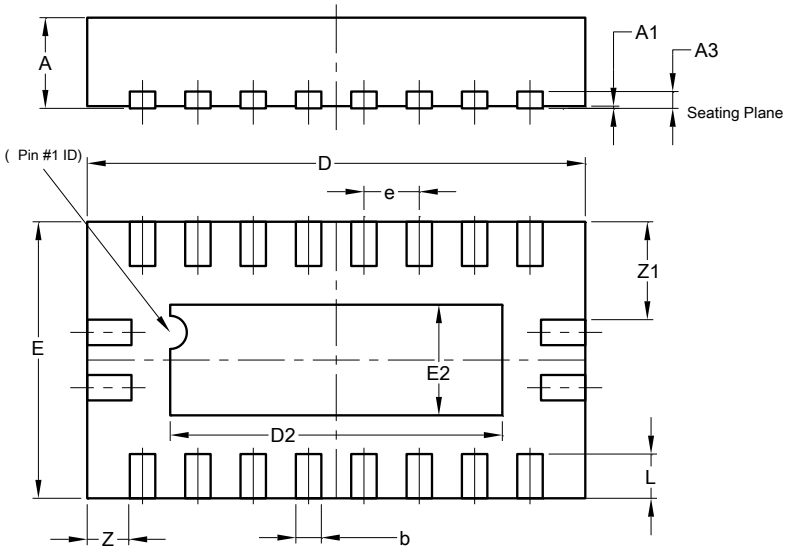


| V-QFN4525-20 | | | |
|---|---|---|---|
| **Dim** | **Min** | **Max** | **Typ** |
| **A** | 0.75 | 0.85 | 0.80 |
| **A1** | 0.00 | 0.05 | 0.02 |
| **A3** | — | — | 0.15 |
| **b** | 0.18 | 0.30 | 0.23 |
| **D** | 4.45 | 4.55 | 4.50 |
| **D2** | 2.85 | 3.15 | 3.00 |
| **E** | 2.45 | 2.55 | 2.50 |
| **E2** | 0.85 | 1.15 | 1.00 |
| **e** | 0.50BSC | | |
| **L** | 0.30 | 0.50 | 0.40 |
| **Z** | — | — | 0.385 |
| **Z1** | — | — | 0.885 |
| **All Dimensions in mm** | | | |


© Diodes Incorporated

NEW PRODUCT

## Suggested Pad Layout

Please see http://www.diodes.com/package-outlines.html for the latest version.

**TSSOP-20**

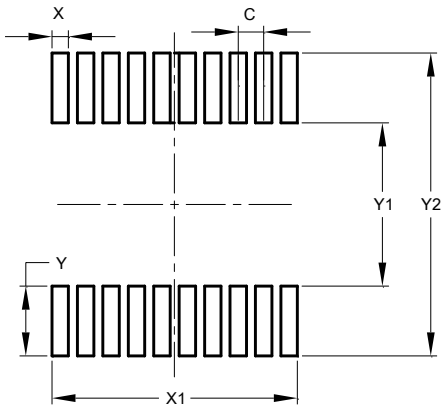


| Dimensions | Value (in mm) |
|---|---|
| C | 0.650 |
| X | 0.420 |
| X1 | 6.270 |
| Y | 1.780 |
| Y1 | 4.160 |
| Y2 | 7.720 |

**V-QFN4525-20**

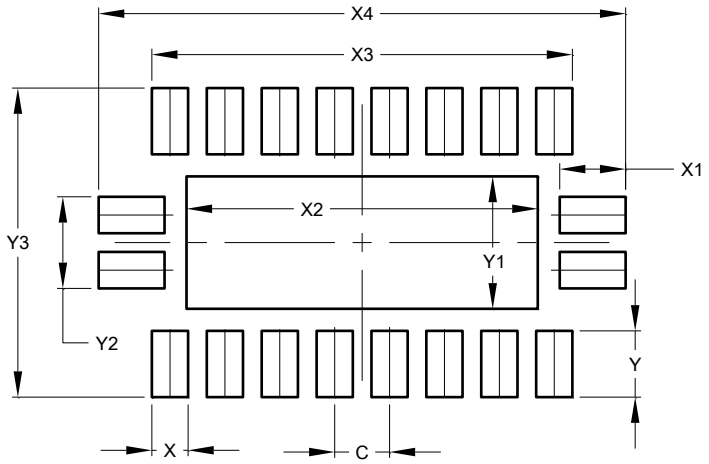


| Dimensions | Value (in mm) |
|---|---|
| C | 0.500 |
| X | 0.330 |
| X1 | 0.600 |
| X2 | 3.200 |
| X3 | 3.830 |
| X4 | 4.800 |
| Y | 0.600 |
| Y1 | 1.200 |
| Y2 | 0.830 |
| Y3 | 2.800 |


© Diodes Incorporated

NEW PRODUCT

**IMPORTANT NOTICE**

DIODES INCORPORATED MAKES NO WARRANTY OF ANY KIND, EXPRESS OR IMPLIED, WITH REGARDS TO THIS DOCUMENT, INCLUDING, BUT NOT LIMITED TO, THE IMPLIED WARRANTIES OF MERCHANTABILITY AND FITNESS FOR A PARTICULAR PURPOSE (AND THEIR EQUIVALENTS UNDER THE LAWS OF ANY JURISDICTION).

Diodes Incorporated and its subsidiaries reserve the right to make modifications, enhancements, improvements, corrections or other changes without further notice to this document and any product described herein. Diodes Incorporated does not assume any liability arising out of the application or use of this document or any product described herein; neither does Diodes Incorporated convey any license under its patent or trademark rights, nor the rights of others. Any Customer or user of this document or products described herein in such applications shall assume all risks of such use and will agree to hold Diodes Incorporated and all the companies whose products are represented on Diodes Incorporated website, harmless against all damages.

Diodes Incorporated does not warrant or accept any liability whatsoever in respect of any products purchased through unauthorized sales channel. Should Customers purchase or use Diodes Incorporated products for any unintended or unauthorized application, Customers shall indemnify and hold Diodes Incorporated and its representatives harmless against all claims, damages, expenses, and attorney fees arising out of, directly or indirectly, any claim of personal injury or death associated with such unintended or unauthorized application.

Products described herein may be covered by one or more United States, international or foreign patents pending. Product names and markings noted herein may also be covered by one or more United States, international or foreign trademarks.

This document is written in English but may be translated into multiple languages for reference. Only the English version of this document is the final and determinative format released by Diodes Incorporated.

**LIFE SUPPORT**

Diodes Incorporated products are specifically not authorized for use as critical components in life support devices or systems without the express written approval of the Chief Executive Officer of Diodes Incorporated. As used herein:

A. Life support devices or systems are devices or systems which:

1. are intended to implant into the body, or
2. support or sustain life and whose failure to perform when properly used in accordance with instructions for use provided in the labeling can be reasonably expected to result in significant injury to the user.

B. A critical component is any component in a life support device or system whose failure to perform can be reasonably expected to cause the failure of the life support device or to affect its safety or effectiveness.

Customers represent that they have all necessary expertise in the safety and regulatory ramifications of their life support devices or systems, and acknowledge and agree that they are solely responsible for all legal, regulatory and safety-related requirements concerning their products and any use of Diodes Incorporated products in such safety-critical, life support devices or systems, notwithstanding any devices- or systems-related information or support that may be provided by Diodes Incorporated. Further, Customers must fully indemnify Diodes Incorporated and its representatives against any damages arising out of the use of Diodes Incorporated products in such safety-critical, life support devices or systems.

Copyright © 2016, Diodes Incorporated

**www.diodes.com**