3.3V USB 3.0 SuperSpeed Dual 2:1 Mux/DeMux Switch with Enable

Features

- Dual 2:1 USB 3.0 Switch
- Bi-directional Operation
- 5 Gbps Performance
- Very high -3 dB bandwidth: 8.2 GHz
- Low Insertion Loss: -1dB @ 2.5 GHz
- Excellent Return Loss: -29 dB @ 2.5 GHz
- Low Crosstalk: -37 dB @ 2.5 GHz
- Low Off Isolation: -25 dB @ 2.5 GHz
- Low Bit-to-Bit Skew, 10 ps max
- Low Channel-to-Channel Skew, 20 ps max
- Supply Voltage 3.3V
- Low power dissipation: 0.5 mW typ.
- Packaging (Pb-free & Green):
  – 42-contact, TQFN (ZH42)

Description

Pericom Semiconductor's PI3USB304 is a dual USB 3.0 2:1 switch. It can switch transmit and receive differential signals for two 5 Gbps SuperSpeed USB 3.0 lanes.

Using advanced high-speed transmission gate technology, PI3USB304 is bidirectional and offers both excellent signal integrity and very low power.

-3 dB bandwidth is 8.2 GHz. Insertion loss is extremely low, only 1 dB at 2.5 GHz. All other ac parameters – return loss, crosstalk, off isolation – lead the industry in performance. Power dissipation is very small -- 0.5 mW typical (0.15 mA @ 3.3V)

Application

Routing USB 3.0 SuperSpeed signals.

Block Diagram

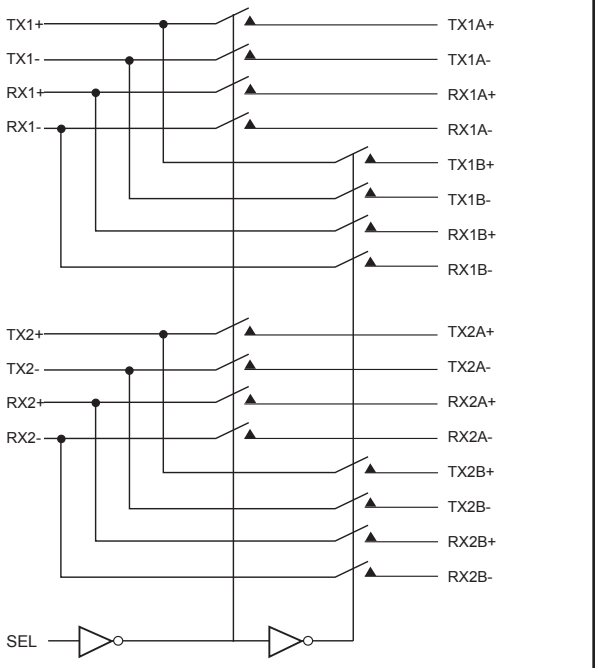

Truth Table

SEL	Function
L	Path A
H	Path B

Pin Configuration (Top View)

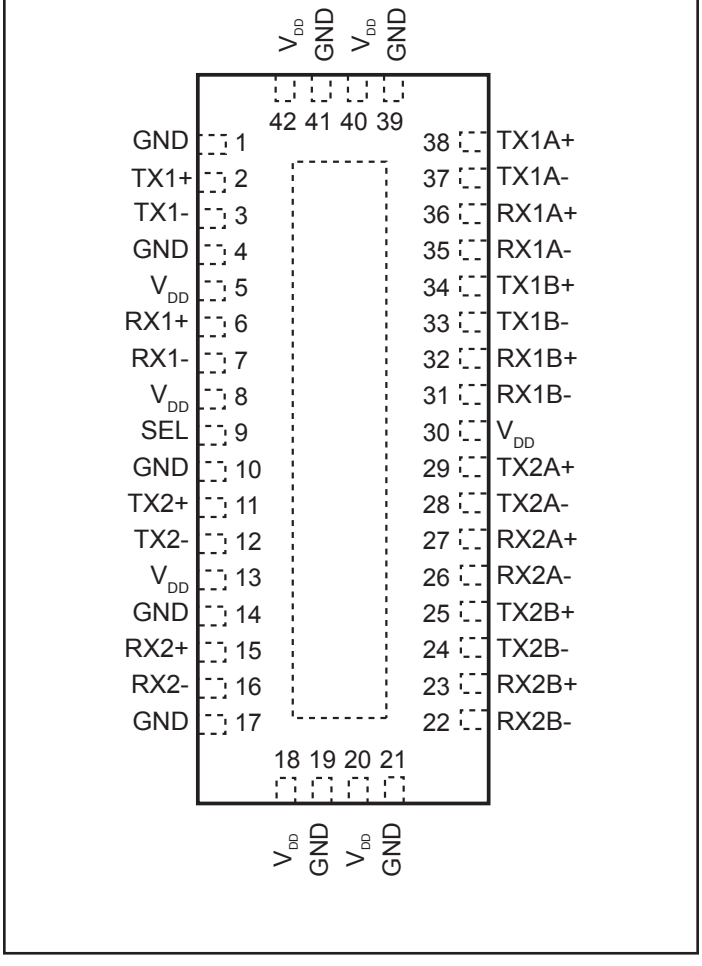

Pin Description

Pin #	Pin Name	I/O	Description
2 3	TX1+ TX1–	I/O	Signal I/O, Channel 0, Port TX1
6 7	RX1+ RX1–	I/O	Signal I/O, Channel 1, Port RX1
11 12	TX2+ TX2–	I/O	Signal I/O, Channel 2, Port TX2
15 16	RX2+ RX2–	I/O	Signal I/O, Channel 3, Port RX2
38 37	TX1A+ TX1A–	I/O	Signal I/O, Channel 0, Port TX1A
36 35	RX1A+ RX1A–	I/O	Signal I/O, Channel 1, Port RX1A
29 28	TX2A+ TX2A–	I/O	Signal I/O, Channel 2, Port TX2A
27 26	RX2A+ RX2A–	I/O	Signal I/O, Channel 3, Port RX2A
34 33	TX1B+ TX1B–	I/O	Signal I/O, Channel 0, Port TX1B
32 31	RX1B+ RX1B–	I/O	Signal I/O, Channel 1, Port RX1B
25 24	TX2B+ TX2B–	I/O	Signal I/O, Channel 2, Port TX2B
23 22	RX2B+ RX2B–	I/O	Signal I/O, Channel 3, Port RX2B
9	SEL	I	SEL=L: path A, SEL=H: path B, see truth table on page 1
5, 8, 13,18, 20, 30, 40, 42	V_{DD}	Pwr	3.3V ±10% Positive Supply Voltage
1, 4, 10, 14, 17, 19, 21, 39, 41, Center Pad	GND	Pwr	Power ground

Maximum Ratings

(Above which useful life may be impaired. For user guidelines, not tested.)

Storage Temperature	–65°C to +150°C
Supply Voltage to Ground Potential	–0.5V to +4.6V
Channel DC Input Voltage	–0.5V to 1.5V
DC Output Current	120mA
Power Dissipation	0.5W
SEL DC Input Voltage	–0.5V to 4.6V

Note: Stresses greater than those listed under MAXIMUM RATINGS may cause permanent damage to the device. This is a stress rating only and functional operation of the device at these or any other conditions above those indicated in the operational sections of this specification is not implied. Exposure to absolute maximum rating conditions for extended periods may affect reliability.

Electrical Characteristics

Recommended Operating Conditions

Symbol	Parameter	Conditions	Min	Typ	Max	Units
V_{DD}	3.3V Power Supply		3.0	3.3	3.6	V
I_{DD}	Total current from V_{DD} 3.3V supply	SEL = 0V or V_{DD}		0.15	1	mA
T_{CASE}	Case temperature range for operation within spec.		-40		85	Celsius

DC Electrical Characteristics for Switching over Operating Range

Parameters	Description	Test Conditions(1)	Min	Typ(1)	Max	Units
V_{IH} - SEL	Input HIGH Voltage, SEL Input		2		3.6	V
V_{IL} - SEL	Input LOW Voltage, SEL Input		0		0.8	V
V_{IK}	Clamp Diode Voltage	V_{DD} = Max., I_{IN} = –18mA		–0.7	–1.2	V
IIH	Input HIGH Current, SEL	V_{DD} = Max., V_{IN} = V_{DD}	-5		+5	µA
I_{IL}	Input LOW Current, SEL	V_{DD} = Max., V_{IN} = 0V	-5		+5	µA
IIH	Input HIGH Current, T_X, R_X	V_{DD} = Max., V_{IN} = 1.5V	–10		+10	µA
I_{IL}	Input LOW Current, T_X, R_X	V_{DD} = Max., V_{IN} = 0V	–10		+10	µA
I_{OZH}	HighZ HIGH Current, T_X, R_X	V_{DD} = Max., V_{IN} = 1.5V	–10		+10	µA
I_{OZL}	HighZ LOW Current, T_X, R_X	V_{DD} = Max., V_{IN} = 0V	–10		+10	µA

Note:

1. Typical values are at V_{DD} = 3.3V, T_A = 25°C ambient and maximum loading.

Switching Characteristics

Parameters	Description	Test Conditions	Min.	Typ.	Max.	Units
t_{PZH}, t_{PZL}	Line Enable Time		2	20	25	ns
t_{PHZ}, t_{PLZ}	Line Disable Time		2	5	25	
t_{b-b}	Bit-to-bit skew within the same differential pair			5	10	ps
t_{ch-ch}	Channel-to-channel skew				20	ps

Dynamic Electrical Characteristics

Parameter	Description	Test Conditions	Min.	Typ.(1)	Max.	Units
DDIL	Differential Insertion Loss (V_{IN} = -10dBm, DC = 0V)	f=2.5GHz f=5GHz		-1.0 -1.8	-1.2 -2.2	dB
$DDIL_{OFF}$	Differential Off Isolation	f=2.5GHz		-25		dB
DDRL	Differential Return Loss	f= 0MHz - 2.5GHz f=2.5GHz - 5GHz	-23 -14	-29 -18		dB
DDNEXT	Near End Crosstalk	f= 0MHz - 2.5GHz f=2.5GHz - 5GHz	-30 -28	-38 -34		dB
BW	-3dB Bandwidth			8.2		GHz

Notes:
1. Guaranteed by design. Typical values are at V_{DD} = 3.3V , T_A = 25°C ambient and maximum loading.

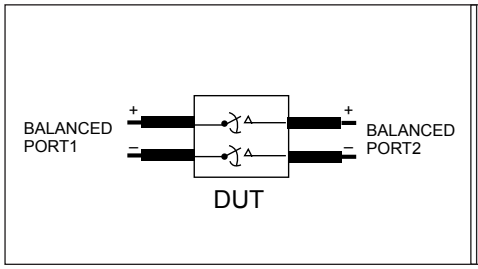

Diff. Insertion Loss and Return Test Circuit

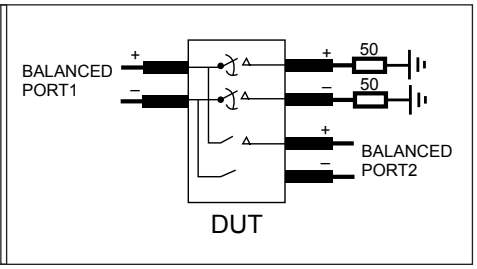

Diff. Off Isolation Test Circuit

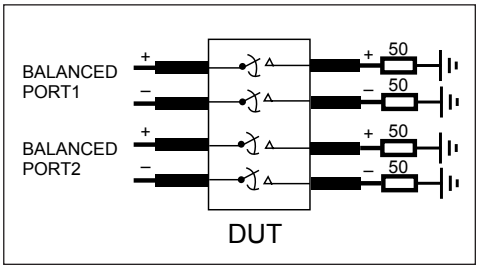

Diff. Near End Xtalk Test Circuit



Differential Insertion Loss

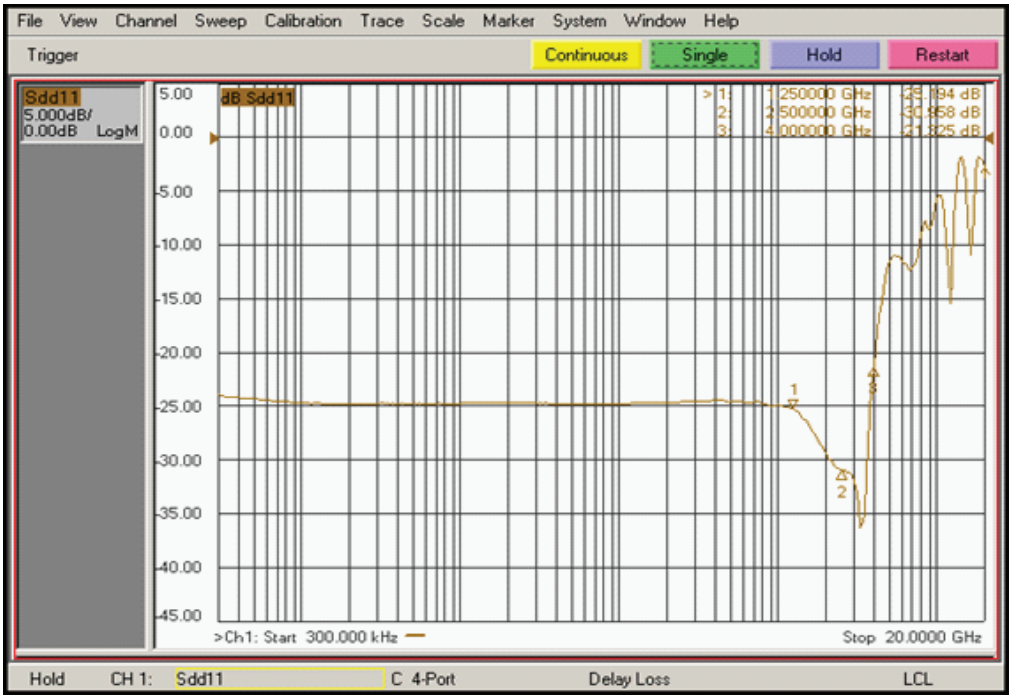

Differential Return Loss

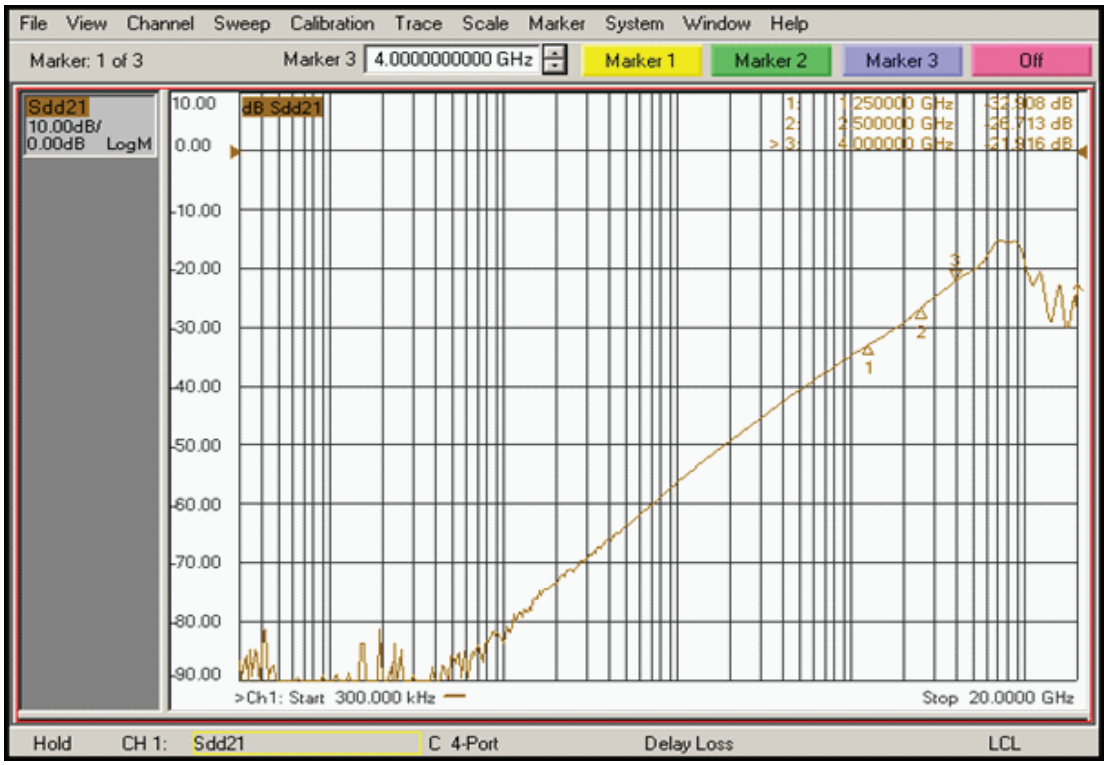

Differential Off Isolation

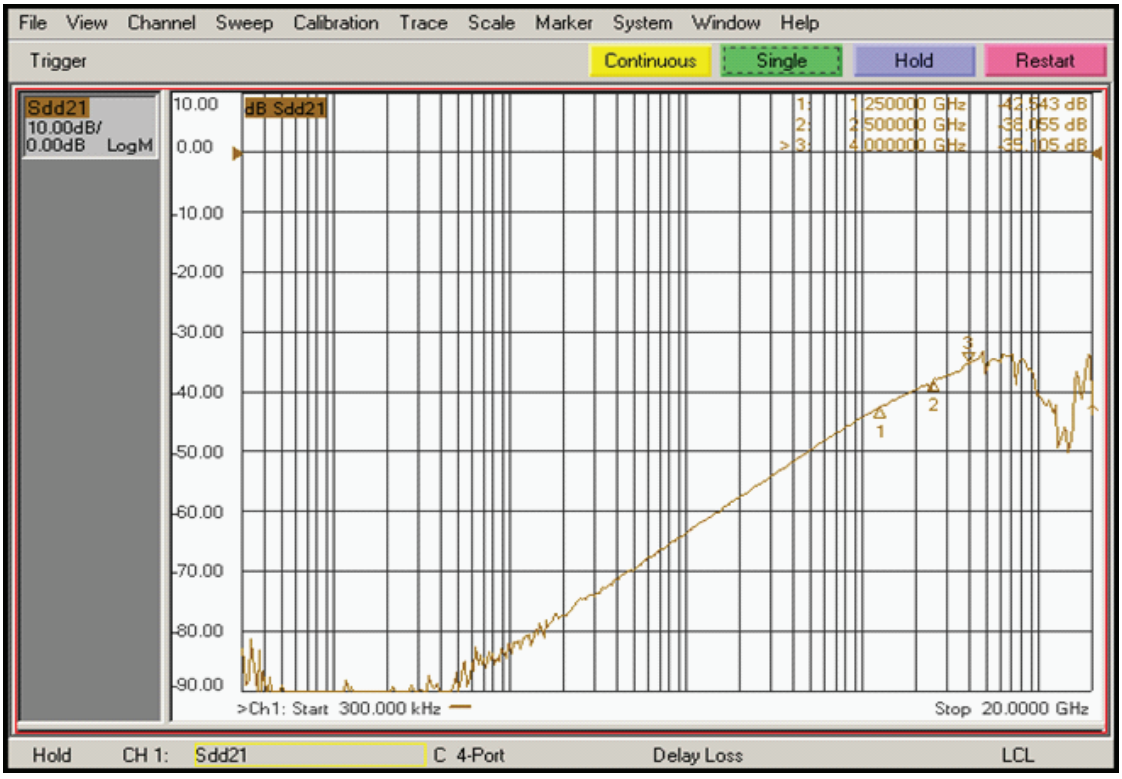

Differential Crosstalk

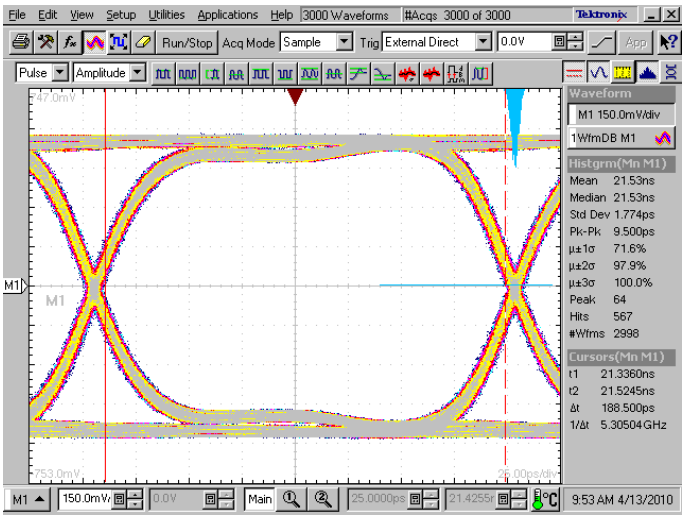

5.0 Gbps RX signal eye without PI3USB304

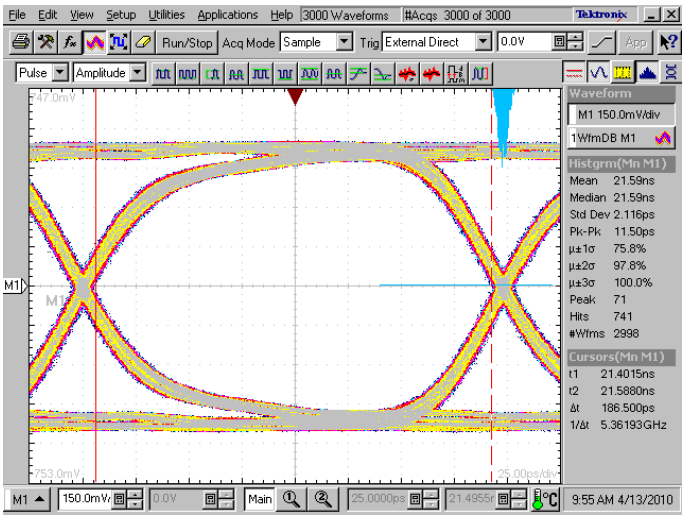

5.0 Gbps RX signal eye with PI3USB304

Test Circuit for Electrical Characteristics(1-5)

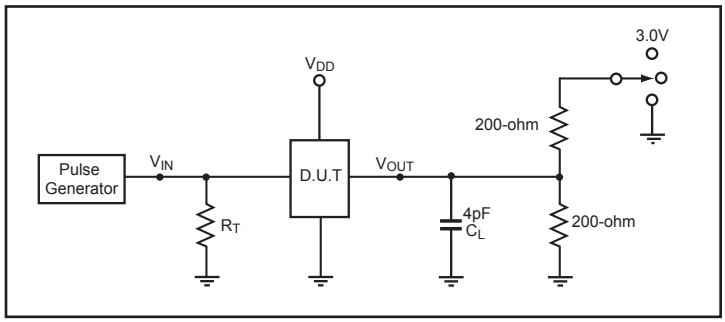

Switch Positions

Test	Switch
t_{PLZ}, t_{PZL}	3.0V
t_{PHZ}, t_{PZH}	GND
Prop Delay	Open

Notes:

1. C_L = Load capacitance: includes jig and probe capacitance.
2. R_T = Termination resistance: should be equal to Z_{OUT} of the Pulse Generator
3. Output 1 is for an output with internal conditions such that the output is low except when disabled by the output control. output 2 is for an output with internal conditions such that the output is high except when disabled by the output control.
4. All input impulses are supplied by generators having the following characteristics: PRR ≤ MHz, $Z_O = 50\Omega$, $t_R \leq 2.5$ns, $t_F \leq 2.5$ns.
5. The outputs are measured one at a time with one transition per measurement.

Switching Waveforms

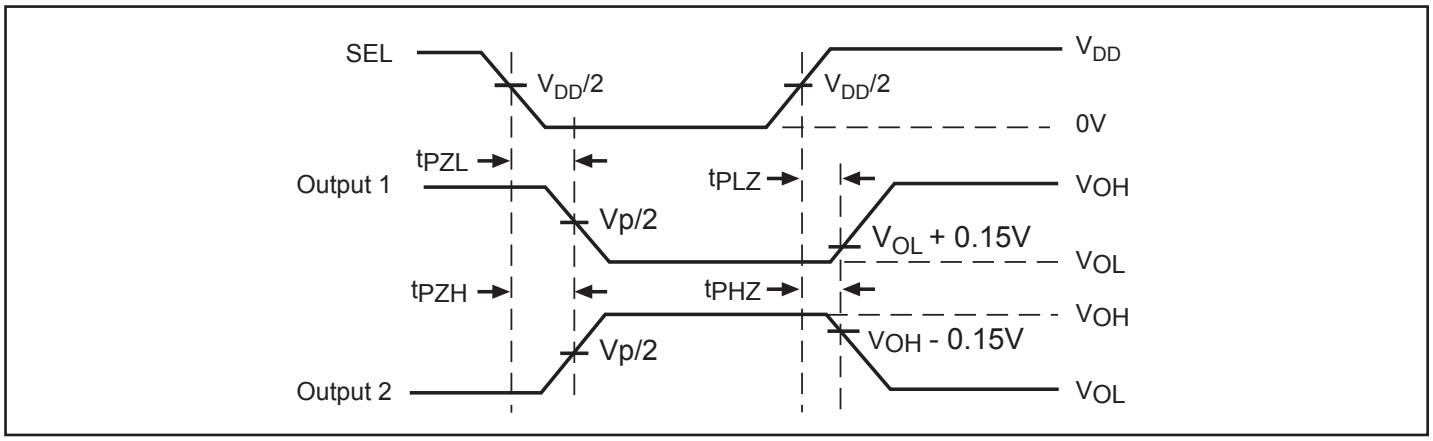

Voltage Waveforms Enable and Disable Times

Packaging Information

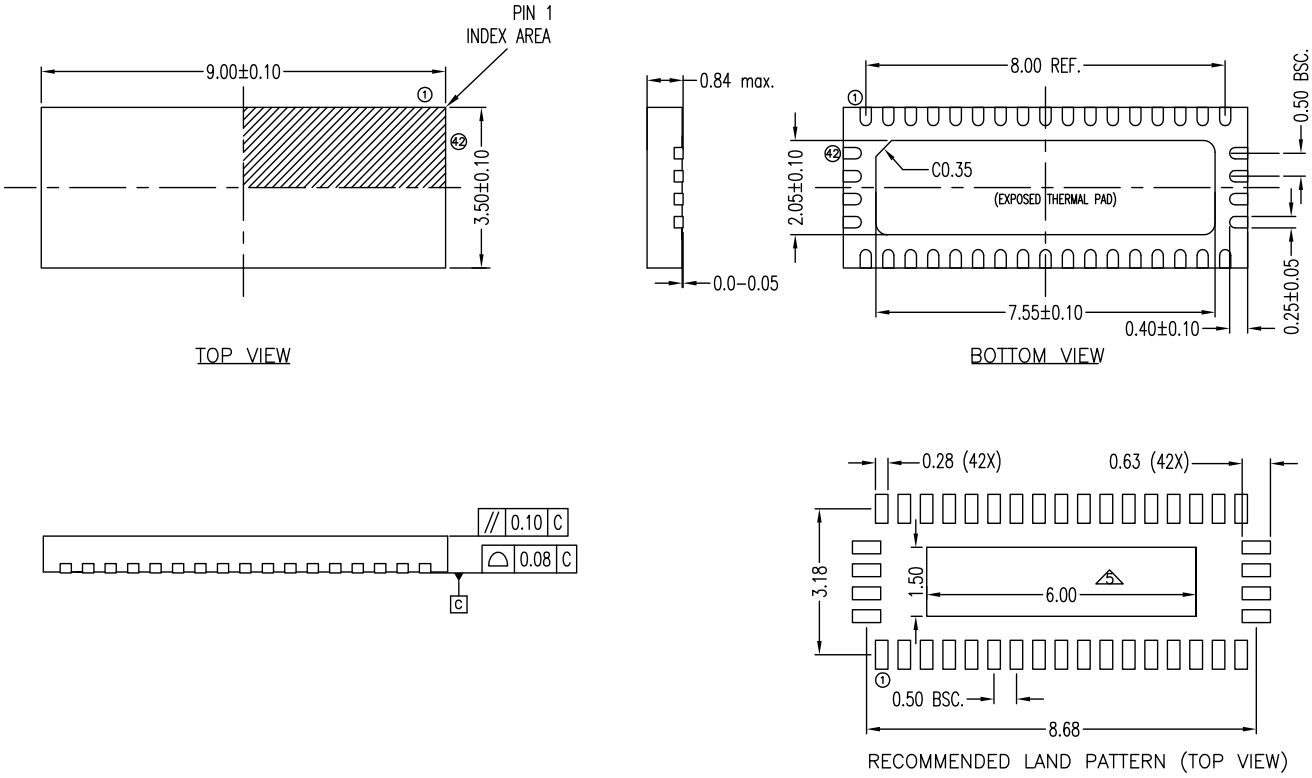

Notes:
1. All dimensions are in millimeters. Angles in degrees.
2. Coplanarity applies to the exposed pad as well as the terminals.
3. Refer JEDEC MO-220.
4. Recommended land pattern is for reference only.
5. Thermal pad soldering area

PERICOM Enabling Serial Connectivity	DATE: 11/14/12
DESCRIPTION: 42-contact Thin Fine Pitch Quad Flat No-Lead (TQFN)	
PACKAGE CODE: ZH42	
DOCUMENT CONTROL #: PD-2035	REVISION:D

Note:
- For latest package info, please check: http://www.pericom.com/products/packaging/mechanicals.php

Ordering Information

Ordering Code	Package Code	Package Description
PI3USB304ZHE	ZH	Pb-free & Green, 42-contact TQFN

Notes:
- Thermal characteristics can be found on the company web site at www.pericom.com/packaging/
- "E" denotes Pb-free and Green
- Adding an "X" at the end of the ordering code denotes tape and reel packaging

All trademarks are property of their respective owners.